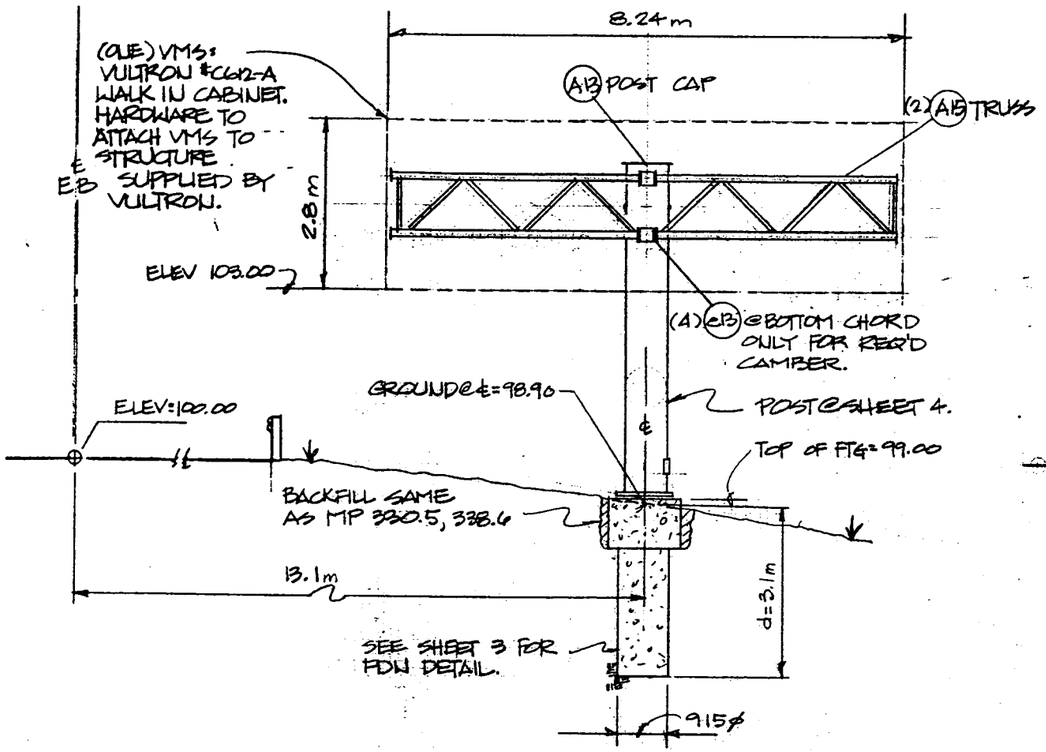

MP 311.0 (E'BOUND)

NTS

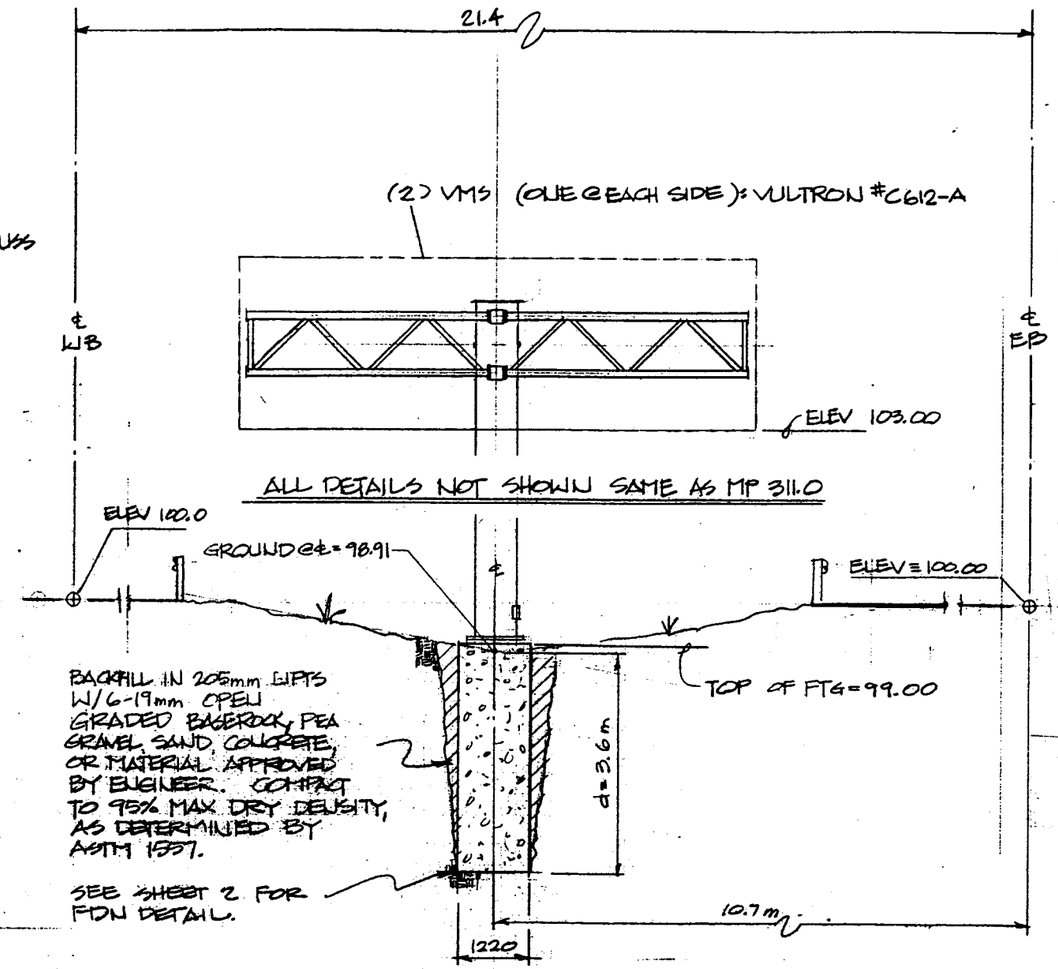

MP 330.5 (E'BOUND)

GENERAL NOTES

1. Design in accordance with AASHTO Standard Specification for Structural Supports for Highway Signs (1994).

2. Design loads:
   - wind = 160 km/hr + 50 km/hr (gust)
   - snow/ice = 150 Pa
   - dLvms =2275 kg/sign
   - foundation engineering based upon soils data in MDT boring logs 3-16-99 through 3-21-99
   - Increase in allowable stresses due to (dL + wind) = 1.40

3. All dimensions in millimeters (mm) unless noted otherwise. Elevations shown in meters.

4. Fabricate sign support structure to following linear camber:

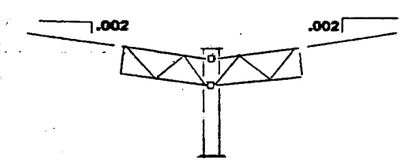

5. Material Specifications and Coating: unless noted otherwise in details:
   - Shapes and Plate: ASTM A36
   - Pipe: API 5L grade B OR ASTM A53 grade B
   - Fasteners: ASTM A325 HDG
   - Anchor bolts: ASTM A449
   - Rebar: ASTM A615 grade 400
   - Concrete: f'c = 20 Mpa (19 minus)
   - Hot dip galvanize to A153 after fabrication.

6. Abbreviations:
   - S/L ship loose
   - UNO unless noted otherwise
   - NTS not to scale
   - BC bolt circle
   - VMS variable message sign
   - HDG hot dip galvanize

DETAIL FOR VULTRON WALK-IN #C612-A 11-18-99

Addison CORPORATION

I-90 SAFE PASSAGE
MDT #09699

Owner	Class
Montana DOT	Scott Construction

VMS SUPPORT LAYOUT

Engineer	Date	SHEET
JAT	2 September 1999	1 of 4
Ck'd JAT	Dwg 19947 – 11	11-18-99

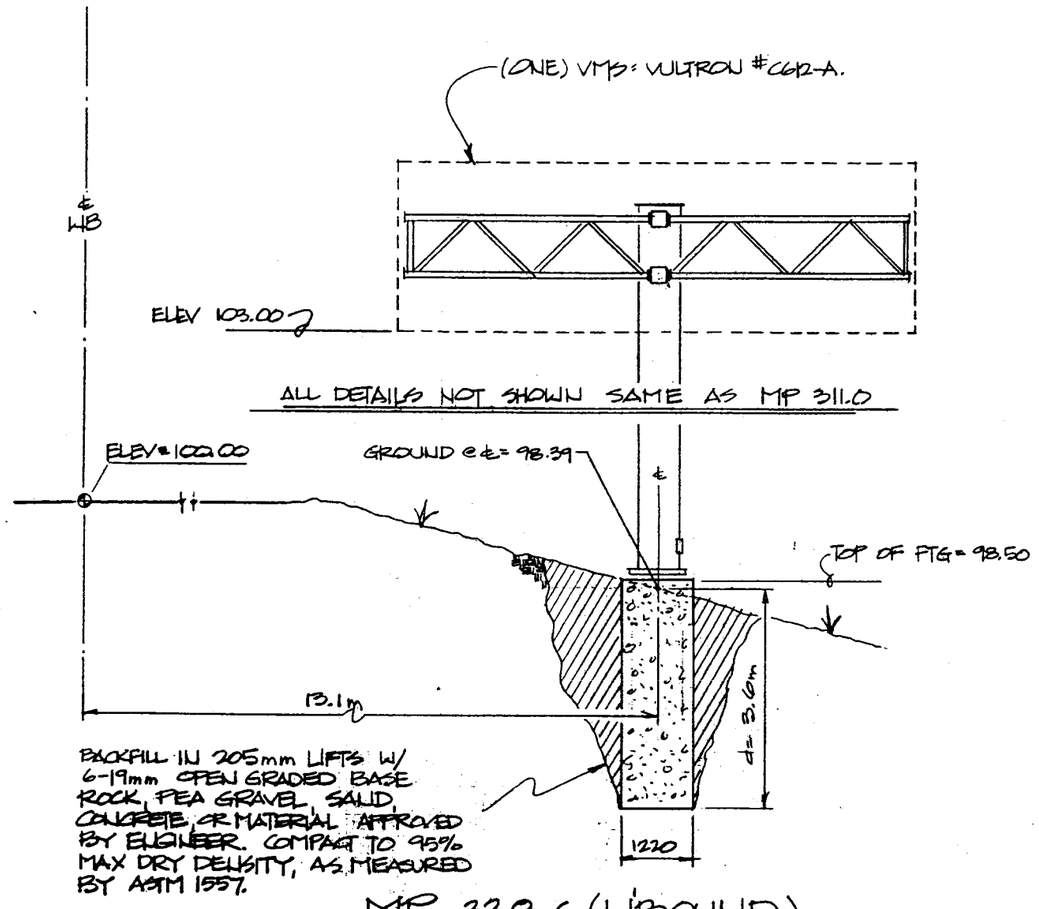

MP 338.6 (WBOUND)

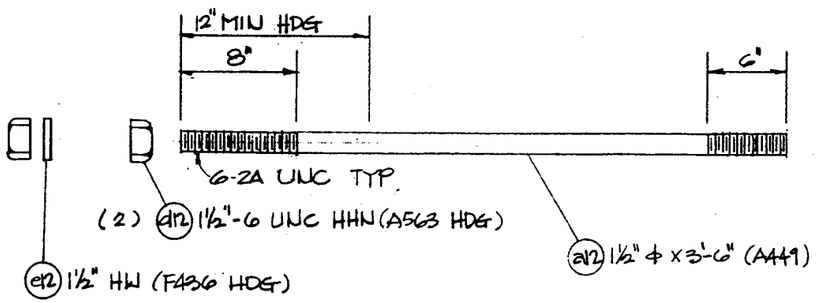

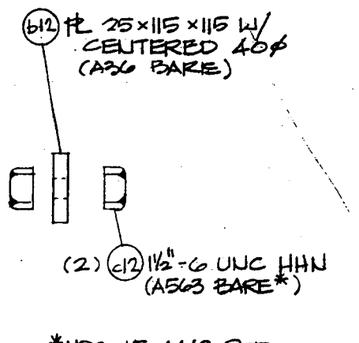

*HDG IF A449 ROD COATED ENTIRE LENGTH.

Mk A12 ANCHOR BOLT ASSY BUILD 24 ASSY

1:5

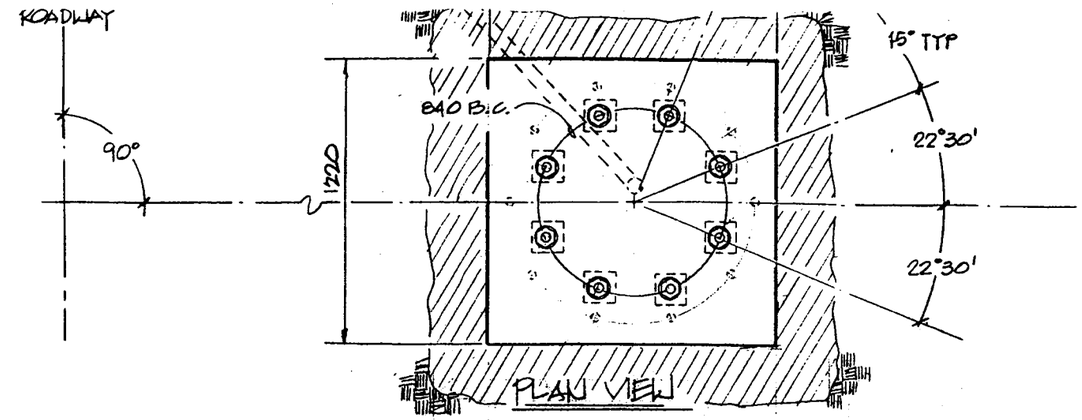

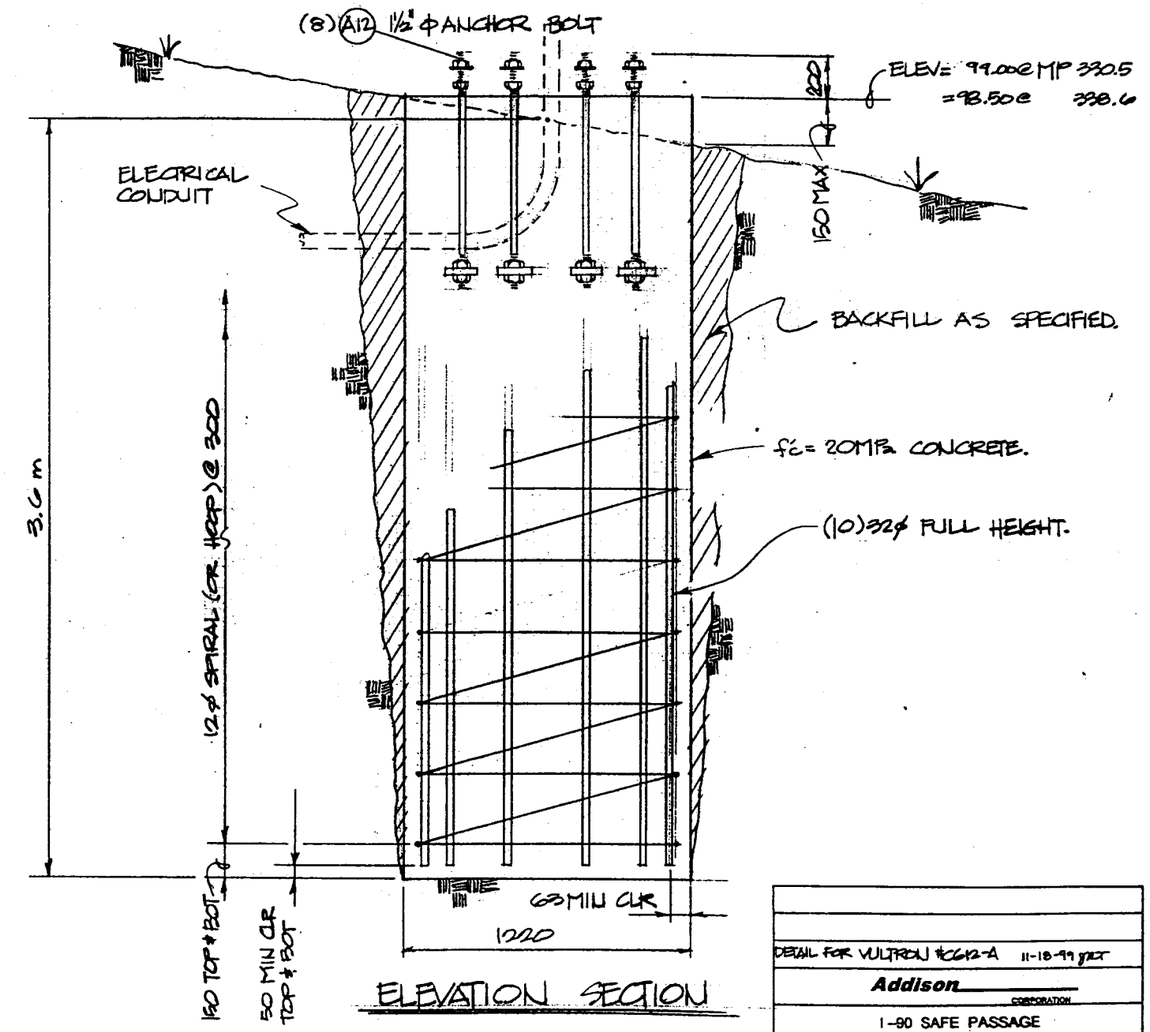

FOUNDATION DETAIL @ MP 330.5 & MP 338.6

1:12.5

DETAIL FOR VULTRON #C612-A 11-18-99 gjzt	
Addison CORPORATION	
I-90 SAFE PASSAGE MDT #09699	
Owner: Montana DOT	Client: Scott Construction
FOUNDATION DETAILS	
Engineer: JAT	Date: 2 September 1999
Ck'd: gjzt	Dwg: 19947 – 12
SHEET 2 of 4	
11-18-99	

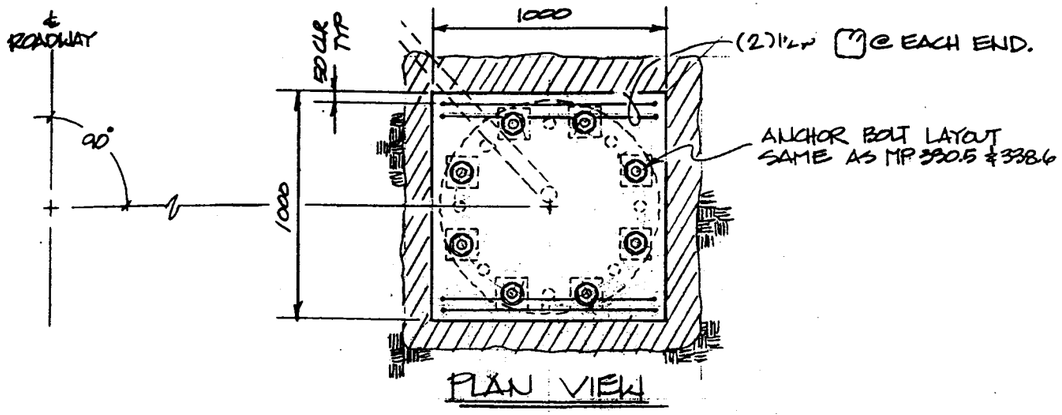

PLAN VIEW

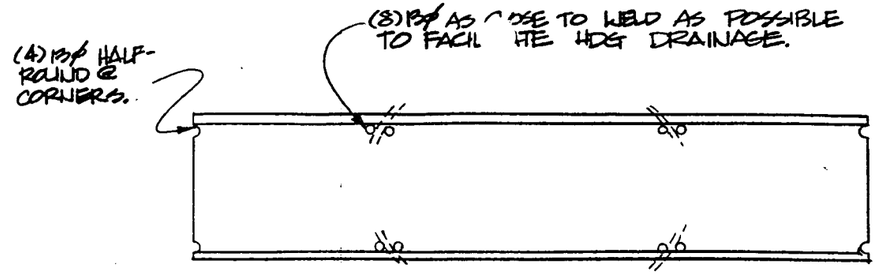

PLAN VIEW

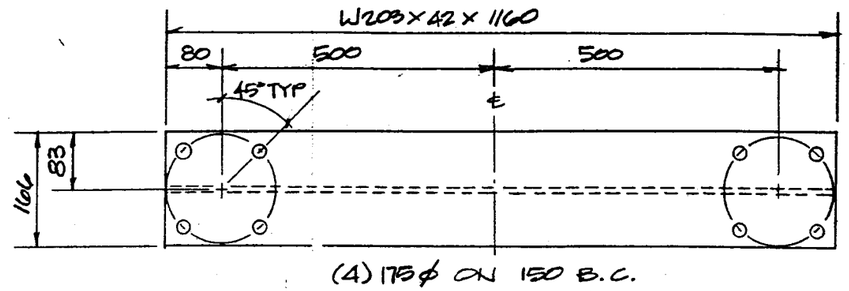

ELEVATION

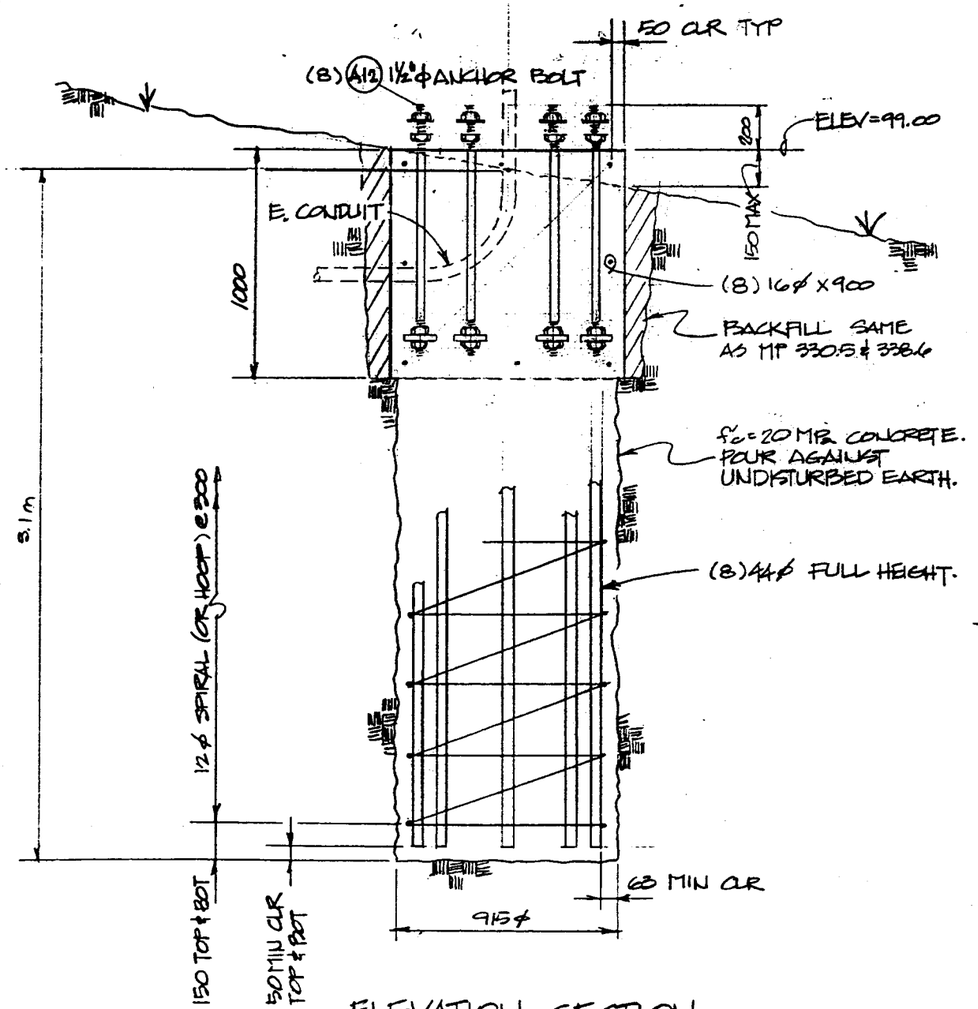

ELEVATION SECTION

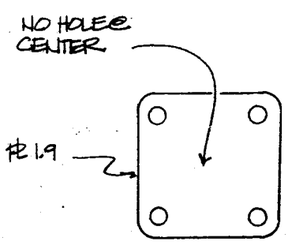

DETAILS NOT SHOWN SAME AS d13.

part e13 BUILD (12) EACH

1:3

part c13 BUILD (6) EACH

NTS

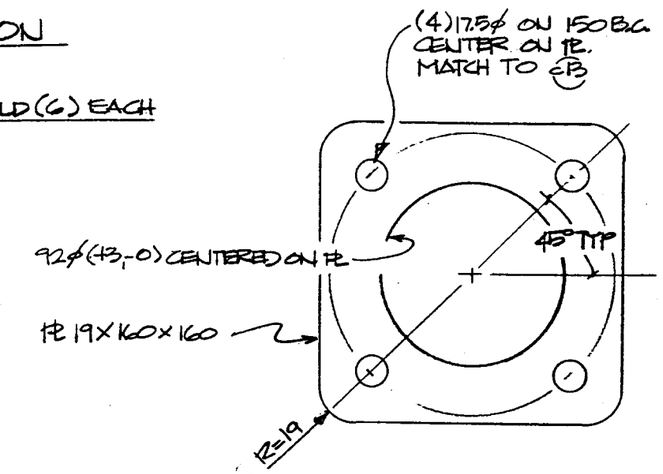

part d13 BUILD (24) EA

1:1.5

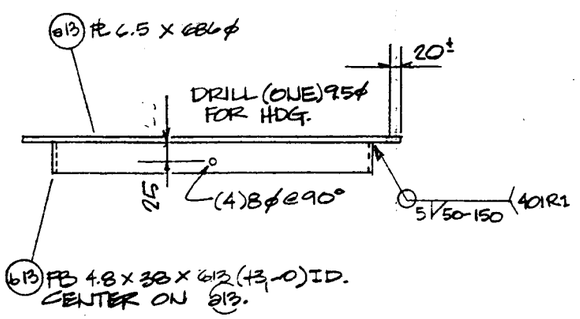

FOUNDATION DETAIL @ MP 311.0

Mk A13 POST CAP BUILD 3 EACH

DETAIL FOR VULTRON #C612-A

Addison CORPORATION

I-90 SAFE PASSAGE
MDT #09699

Owner	Client
Montana DOT	Scott Construction

DETAILS

Engineer	Date	SHEET
JAT	2 September 1999	3 of 4
Ck'd JAT	Dwg 19947 – 13	

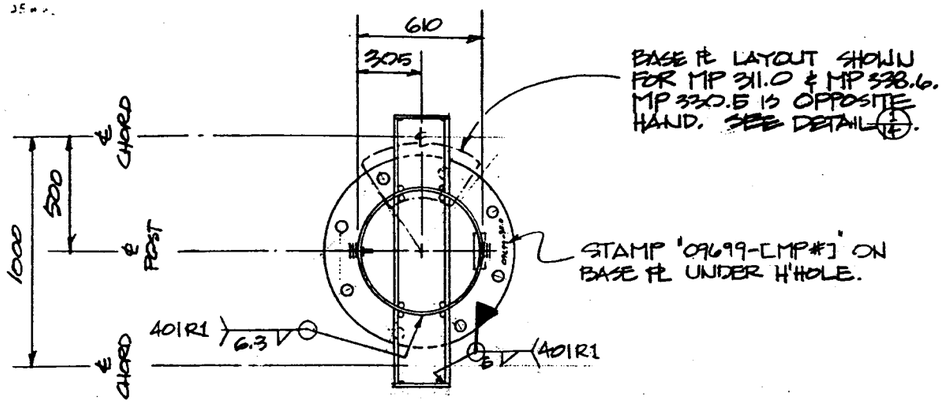

PLAN VIEW

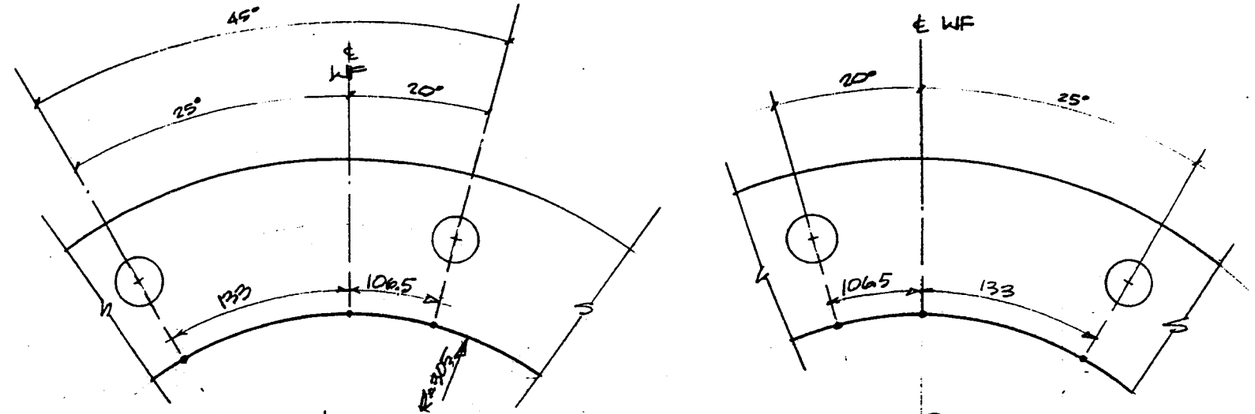

DETAIL 1/14 BASE PL ALIGNMENT

NTS

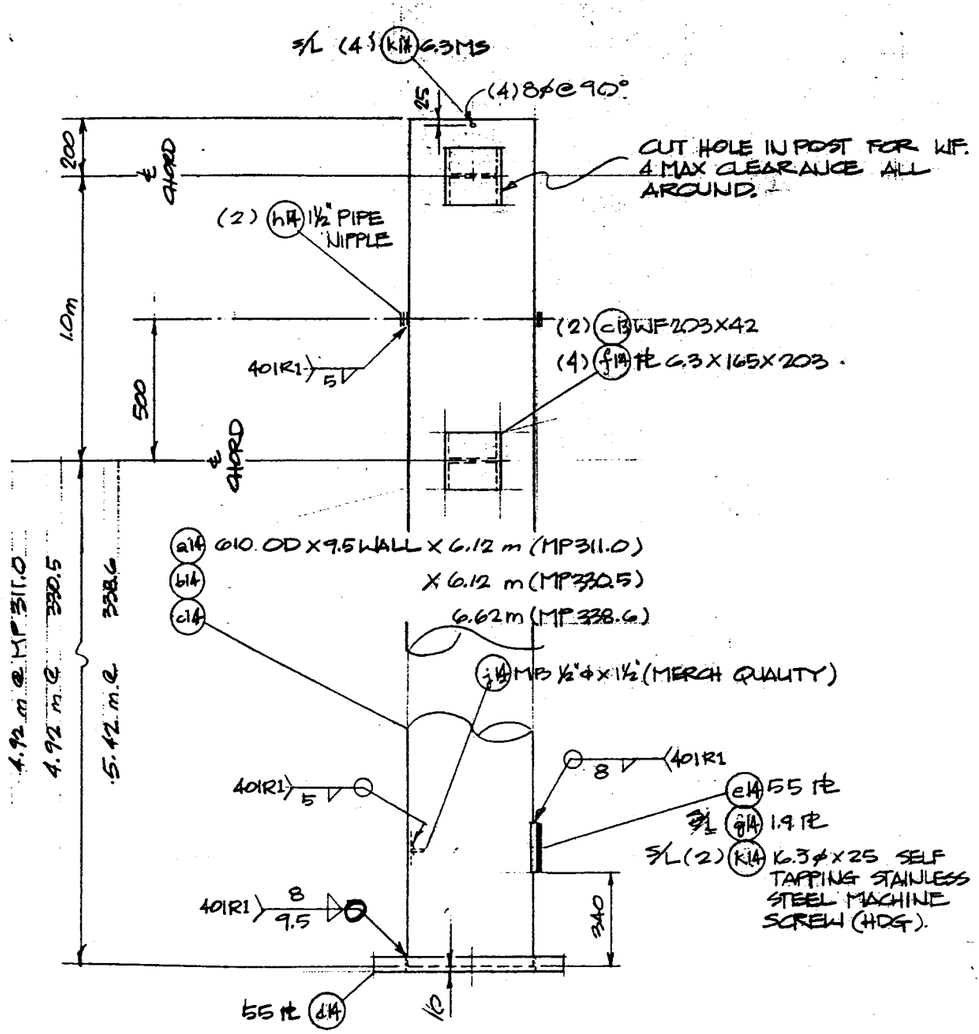

POST BUILD (7) EACH

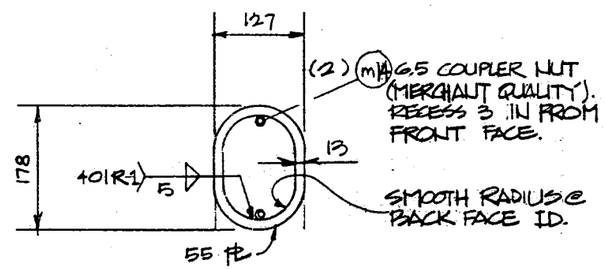

part (e14) 55 PL BUILD (3) EACH

1:4

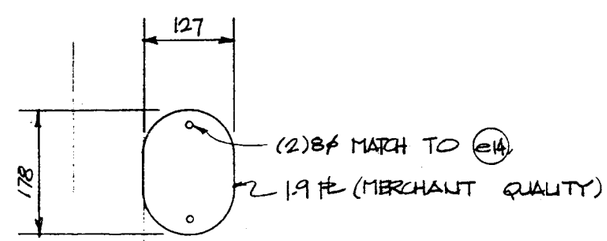

S/L part (g14) HANDHOLE COVER BUILD (3) EACH

1:4

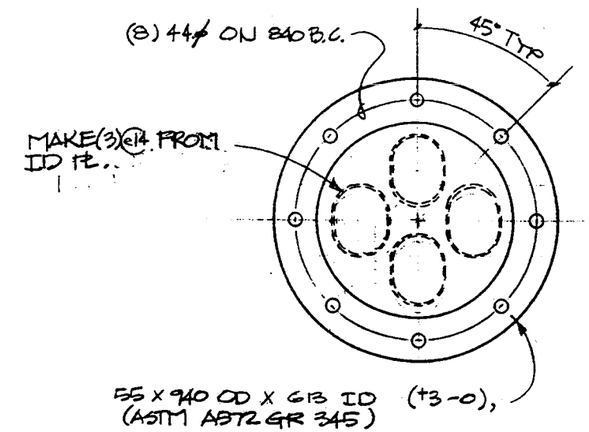

part (d14) BASE PL BUILD 3 EACH

NTS

DETAIL FOR VULTRON WALK-IN #C612-A 11-18-99 JT

Addison CORPORATION

I-90 SAFE PASSAGE
MDT #09699

Owner	Client
Montana DOT	Scott Construction

POST

Engineer	Date	SHEET
JAT	2 September 1999	4 of 4
Ck'd JLT	Dwg 19947 – 14	

11-18-99

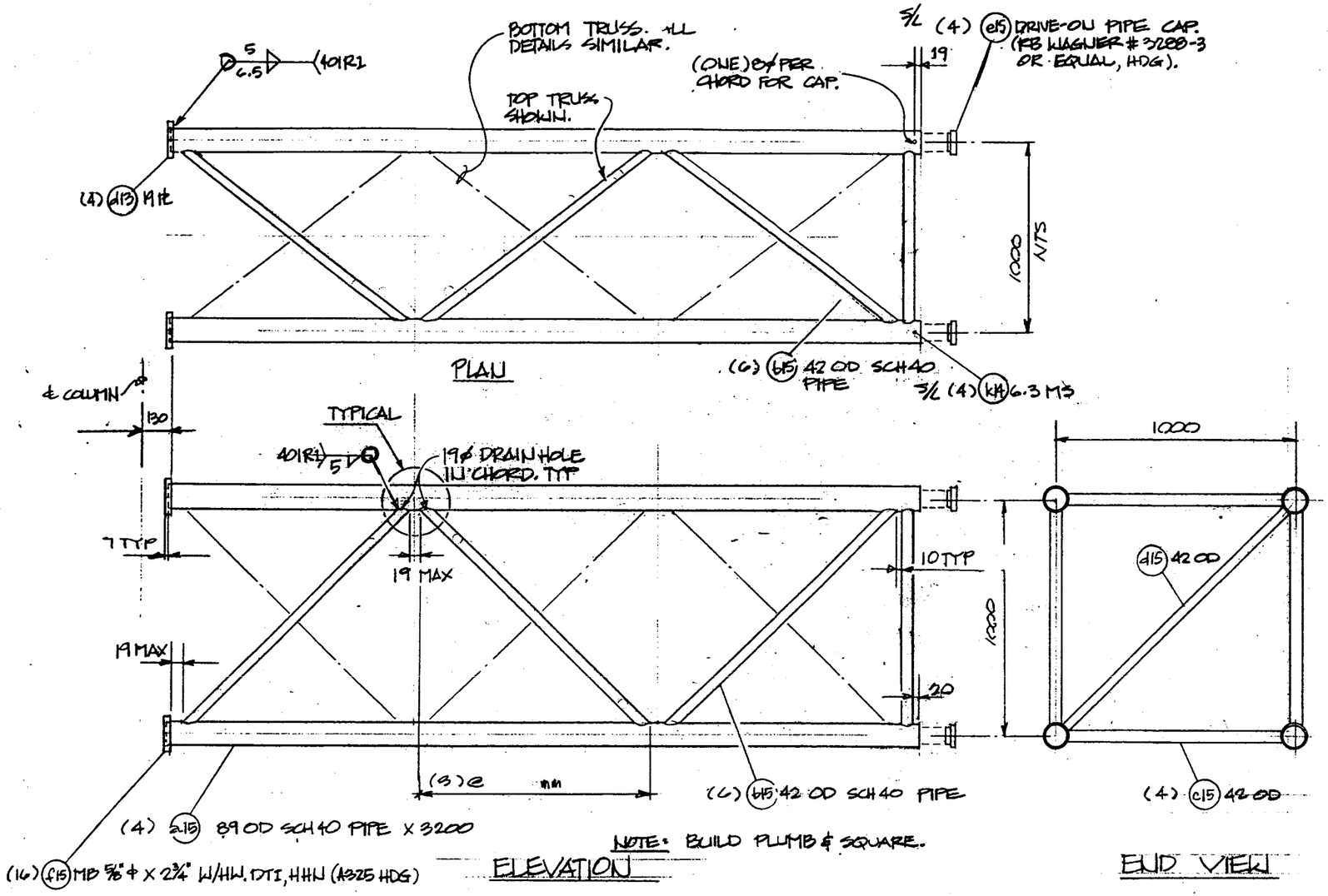

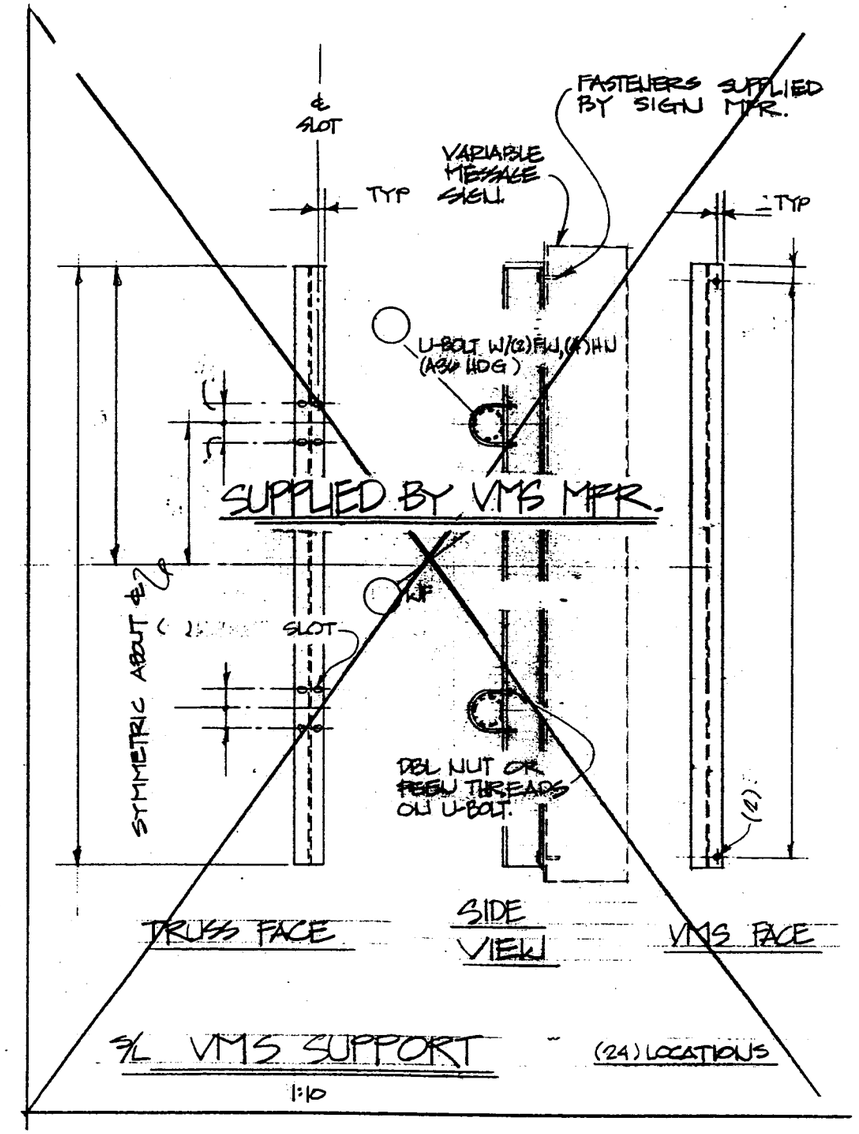

MK A15 TRUSS

BUILD (3) AS SHOWN

A15/OH

BUILD (3) OPPOSITE HAND

1:10

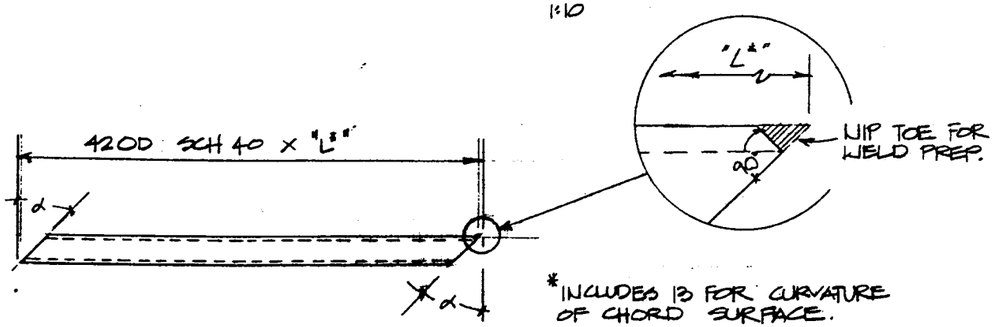

*INCLUDES 13 FOR CURVATURE OF CHORD SURFACE.

QTY	part#	α	L*
72	b15	46.7	1387
24	c15	0°	924
6	d15	0°	1385

Detail for Vultron walk-in cabinet #C612-A JAT

Addison CORPORATION

I-90 SAFE PASSAGE
MDT #09699

Owner: Montana DOT
Client: Scott Construction

TRUSS FOR VULTRON #C612-A

Engineer: JAT
Ck'd: JAT
Date: 18 November 1999
Dwg: 19947 - 15
SHEET: 4a . 4

MDT 04699

Addison CORPORATION

I-90 SAFE PASSAGE (project)	8-27-99 (date)
CONTRACT LOADING	(engineer)
	19947-101 (page)

11-18-99 JMT

Revised for Vultron walk-in #C612-A, p 106, 109-118, 122-131

REFERENCES:

AASHTO Std Spec for Struct Spts for Highway Signs ... (1994)
Sign Support Fdn Design HRB Bulletin 247
Design of Welded Structures: 12th Printing (Blodgett)

LAYOUT @ 311.0:

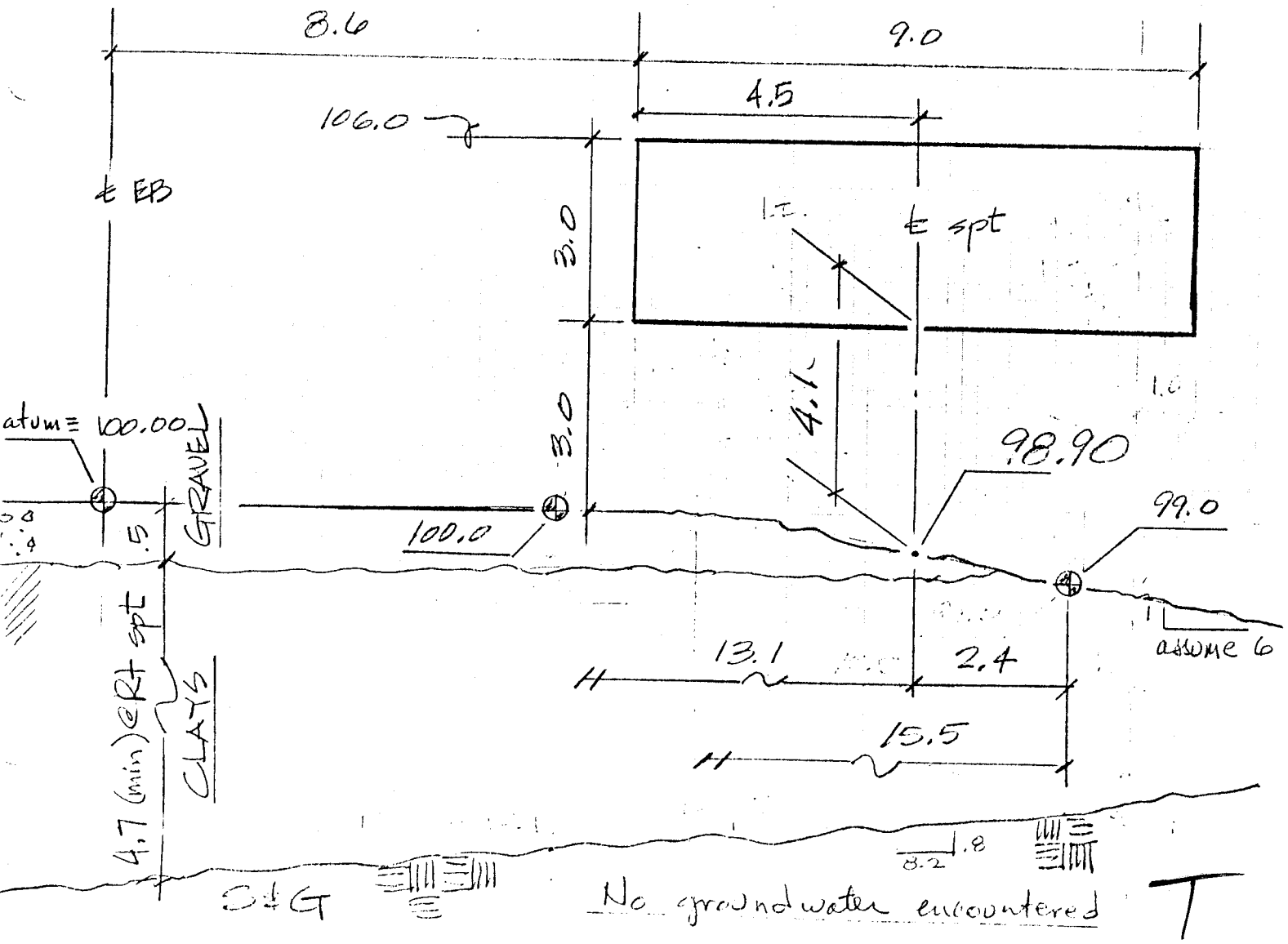

Addison CORPORATION

project	date 8-27-99
	engineer
	page 102

LAYOUT 330.5

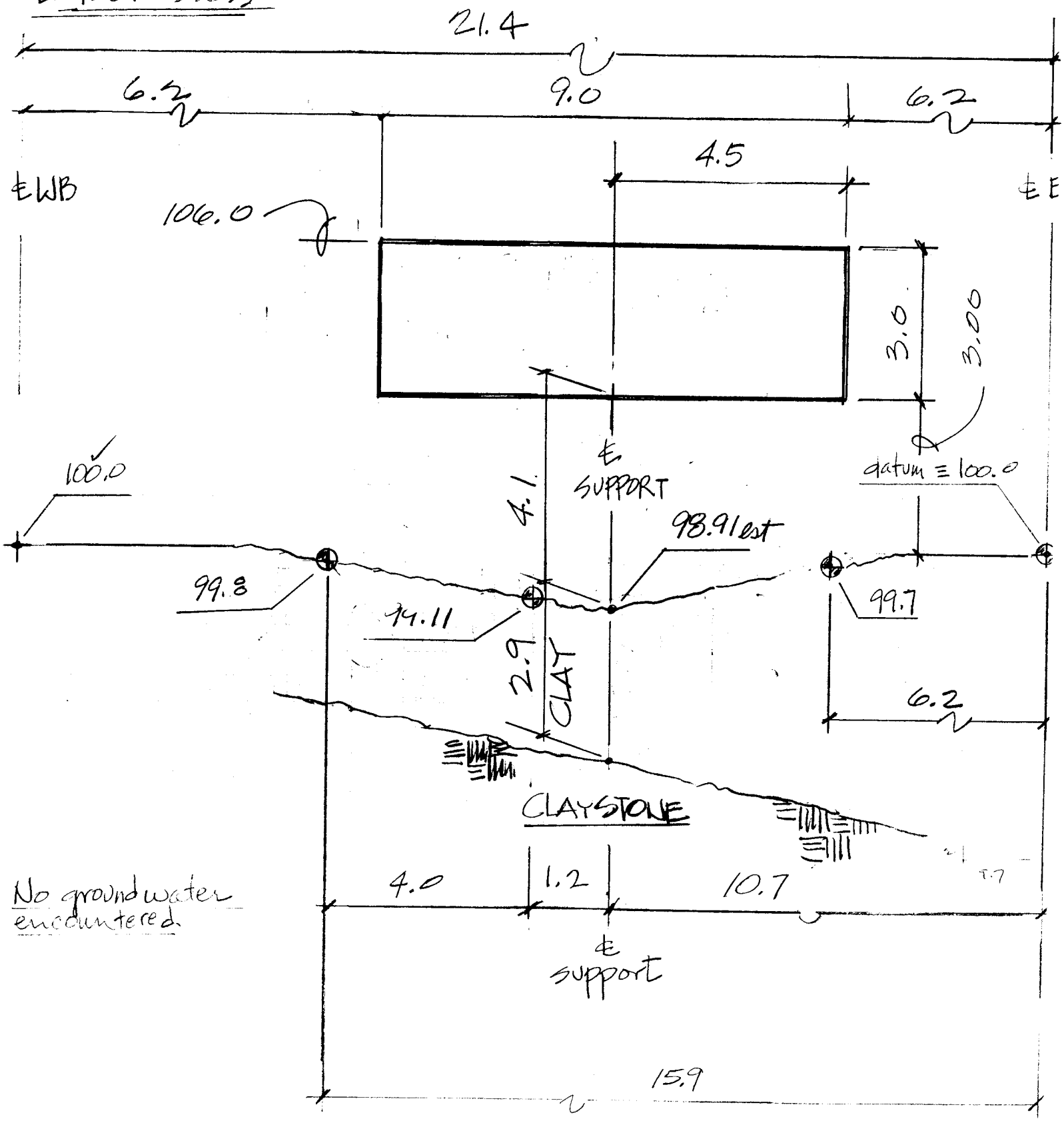

No groundwater encountered.

Addison CORPORATION

project	date 8-27-99
	engineer
	page 103

LAYOUT 338.6

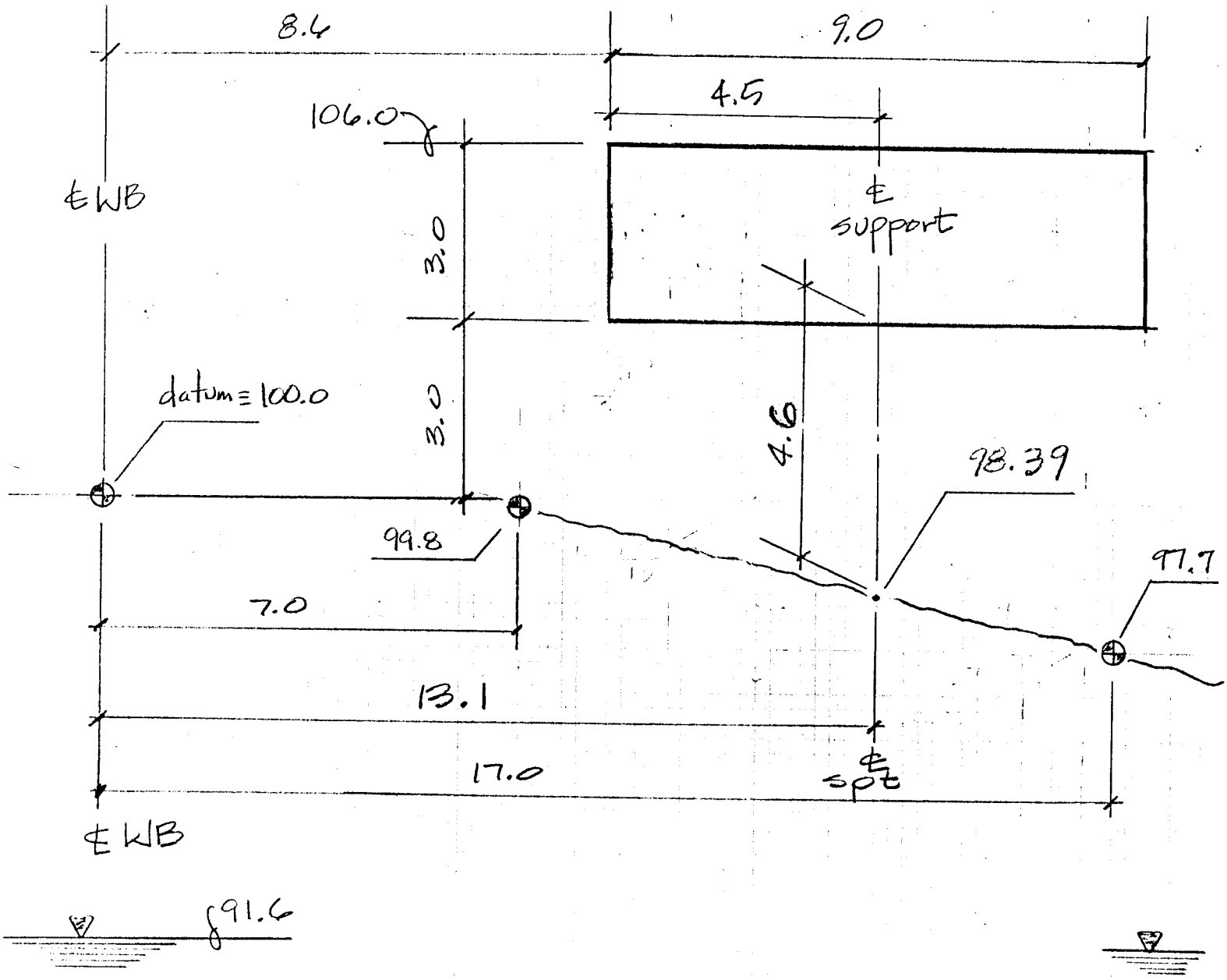

SANDY GRAVELS

Addison CORPORATION

project	date 8-27-99
	engineer
	page 104

LIVE LOADS:

wind (horiz)

METRIC	ENGLISH
$p = .0473(1.3V)^2 C_d C_h$ where $V = 160$ kmh, $C_d = 1.2$, $C_h = 1.0$	$p = .0025(1.3V)^2 C_d C_h$ where $V = 100$ mph, $C_d = 1.2$, $C_h = 1.0$
$= .0473(1.3 \times 160)^2(1.2)(1.0)$	$= (.0025)(1.3 \times 100)^2(1.2)(1.0)$
$= 2455$ Pa	$= 51$ psf
↓	↓
use 2600 Pa	use 55 psf
snow/ice (vert) 3 psf = 150 Pa	3 psf

DEAD LOADS: (Vert)

VMS wt = 2275 kg

area = H × L

= 3m × 9m

$$w = \frac{(2275\,kg \times 9.8\,\frac{m}{s^2})}{9.0\,m} = 2.48\,kN/m$$

= 170 plf

Addison CORPORATION

project	date 8-27-99
CONTRACT LOADING	engineer
	page 105

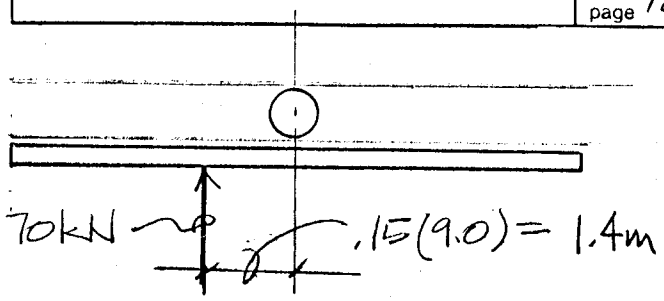

$T_{wind} = 2600 Pa \times 3 \times 9 = 70 kN$

$.15(9.0) = 1.4m$

PLAN

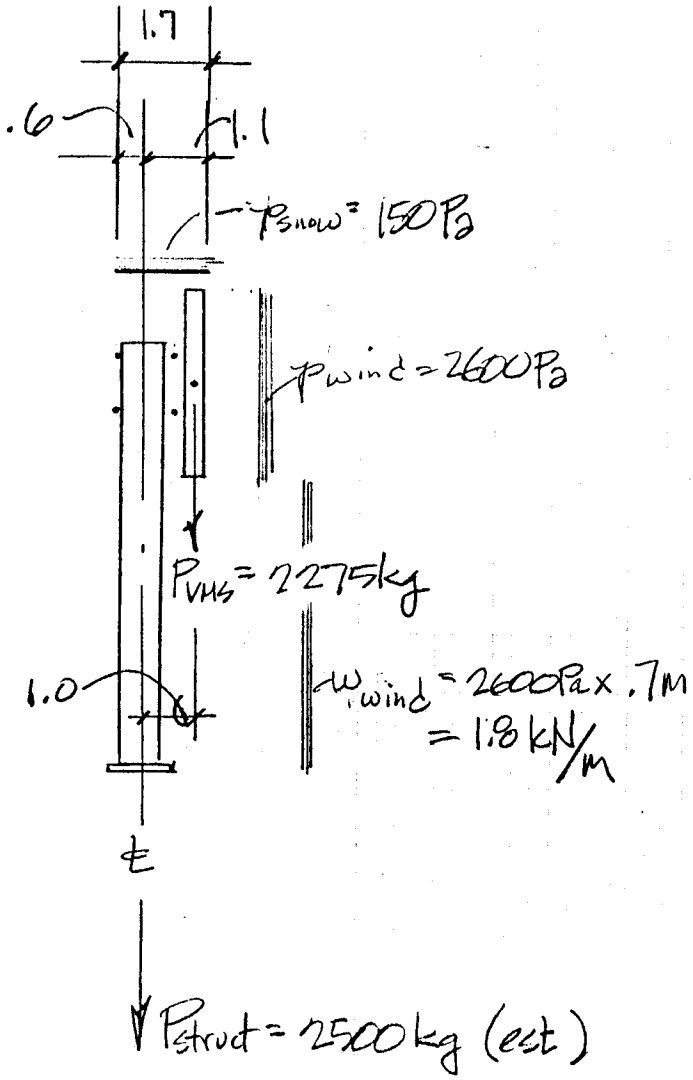

SIDE

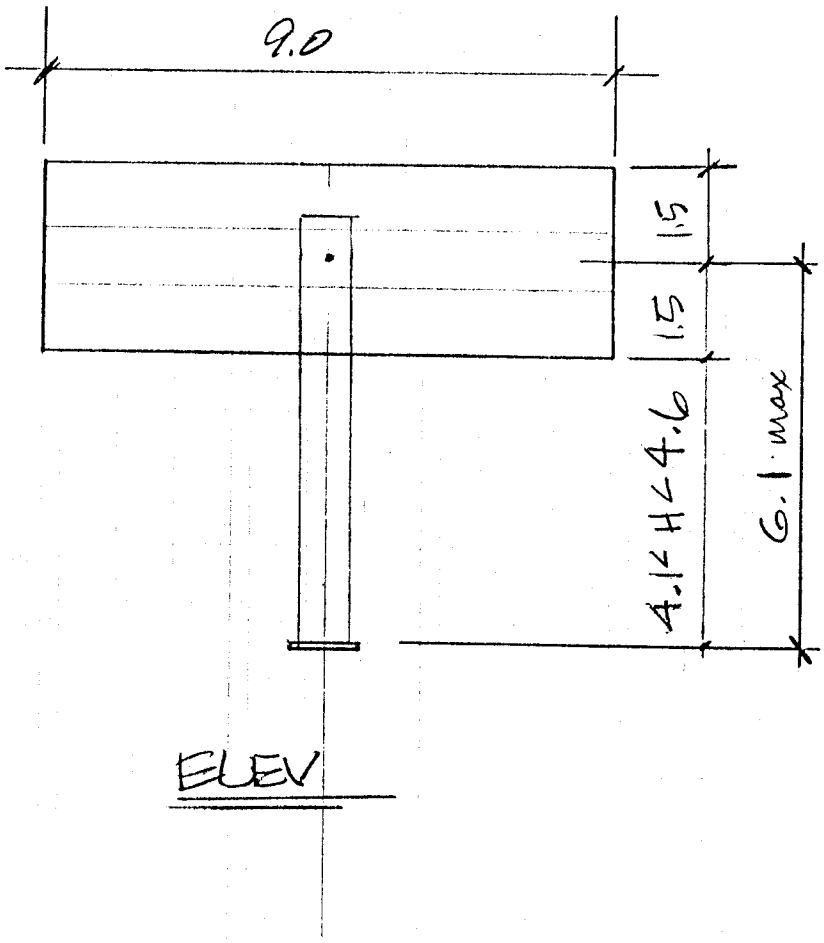

ELEV

Addison CORPORATION

project	date
	engineer
	page 106

TRUSS

bending in X-X & Y-Y axis.

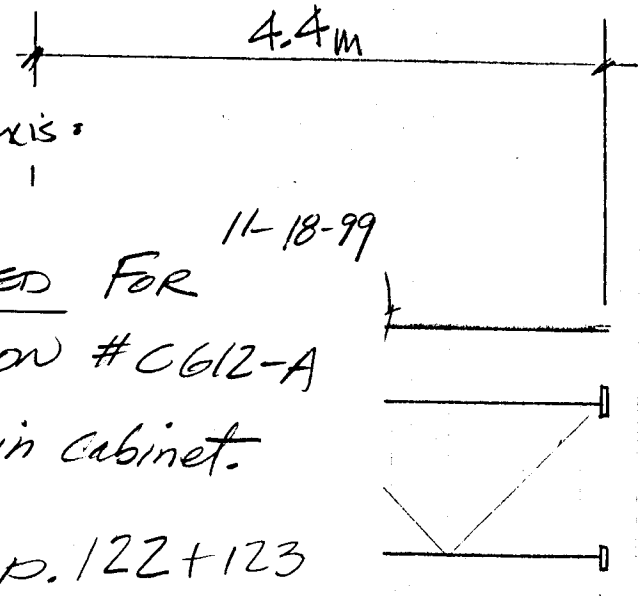

w=1.15

REVISED FOR 11-18-99

VULTRON #CG12-A

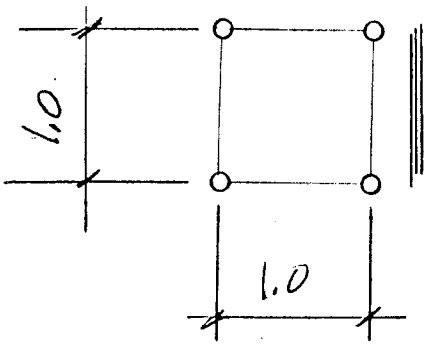

w= 2.6
= 7.8

Walk in cabinet.

See p. 122+123

SIDE

$$M_{max} = \frac{wl^2}{2}$$

$$M_{y-y} = \frac{7.8\frac{kN}{m} \times 4.4^2}{2} = 75.5\ kNm$$

$$M_{x-x} = \frac{2.74 \times 4.4^2}{2} = 26.5\ kNm$$

$$V_{max} = (2.74 + 7.8)4.4 = 46.4\ kN$$

TRUSS CAPACITY: 1.4.1(E)2

$$CSR = \frac{f_a}{F_a} + \frac{f_b}{F_b} + \left(\frac{f_v}{F_v}\right)^2 \leq 1.0$$

3" sch 40 $t = .216" = 5.49\,mm$
$(A = 2.22\,in^2 = 1436\,mm^2)$
$r = 31.3\,mm$

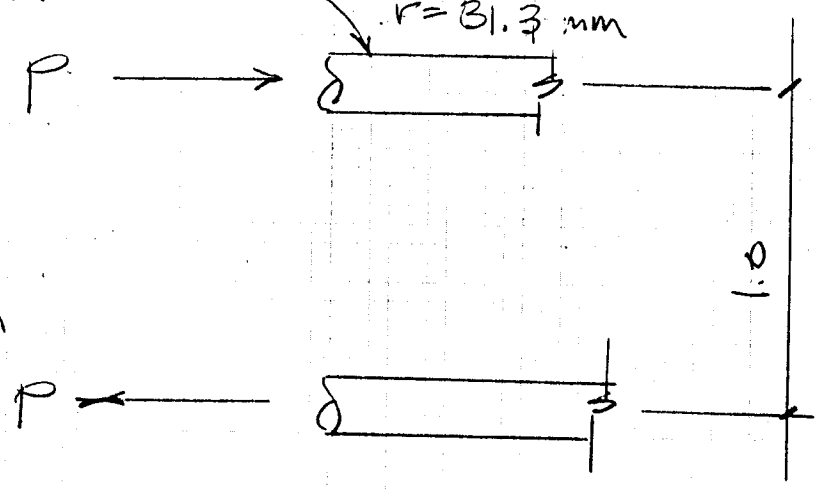

$M = P \times arm$
$= (f_a \times A_{chord}) \times arm$

$$\frac{Kl}{r} = \frac{1.0 \times 2.0\,m}{31.3\,mm} \; \frac{1000\,mm}{m} = 64$$

$$f_a = \frac{M_{max}}{A \times 1.0\,m} = \frac{\left(\frac{75.5}{2\,chords} + \frac{26.5}{1\,chord}\right) kN}{1436\,mm^2\,(1.0\,m)} \cdot 1{,}000{,}000\,\frac{mm^2}{m^2} = 44{,}743\,\frac{kN}{m^2}$$

$f_a = 44.8\,MPa = .19\,F_y$ (A53B: $F_t = 415\,MPa$, $F_y = 240\,MPa$)
$E = 200{,}000\,MPa$

$$\sqrt{\frac{2\pi^2 E}{F_y}} = \sqrt{\frac{2\pi^2(200{,}000)}{240\,MPa}} = 128 \quad \therefore$$

$$F_a = .52F_y - \left[\frac{.13\,F_y^2}{\pi^2 E}\left(\frac{Kl}{r}\right)^2\right] = .52F_y - .07F_y = .46\,F_y$$

$$f_v = \frac{46.4\ kN}{4\ chords \times 1436 mm^2} = 8.1\ MPa = .04 F_y$$

$$F_v = .33 F_y$$

$$CSR = \left(\frac{.19}{.46 \times 1.40}\right) + \cancel{\frac{f_b}{F_b}}^{\,0} + \left(\frac{.04}{.33 \times 1.40}\right)^2 = .303 \leq 1.0 \checkmark$$

<u>Check flange connection:</u>

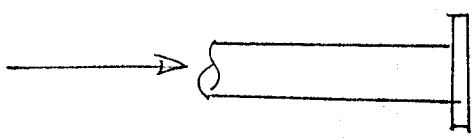

$$P = f_a \times A = 44.8\ MPa \times 1436 mm^2 = 65\ kN$$

$$V = \frac{46.4\ kN}{2\ chords (min)} = 23.2\ kN$$

a.) (4) A325M 3/4" ϕ: $\frac{(.2248\ K/kN)}{4\ ea}\left(\frac{65 kN}{19.4} + \frac{23.2}{7.5}\right) = .36 < 1.0 \checkmark$

b.) 70XX 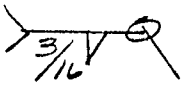

$$P_{cap\,shear} = \left(\frac{\frac{3}{16}''}{\sqrt{2}}\right)(\pi\ 3.5\ li)(.3)(70 ksi) \cdot .2248 K/kN = 136 kN \checkmark$$

Addison CORPORATION

project	date
	engineer
	page 109

POST LOADS: 1.4.1(E)1 CASR = $\frac{f_a}{.6F_y} + \frac{f_b}{C_A F_b(1.4)} + \left(\frac{f_v}{F_v(1.40)}\right)^2 \leq 1.0$

Art 1.2.6

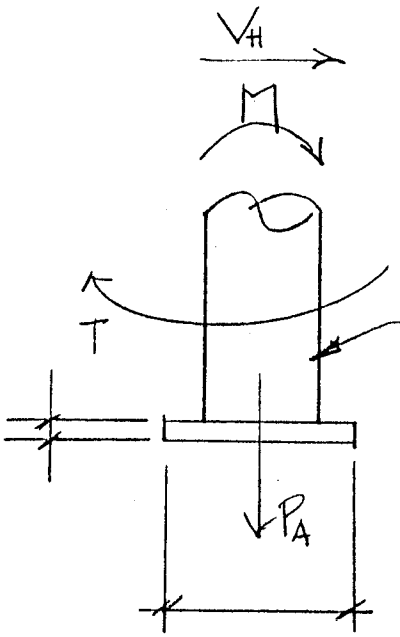

28" OD x .375" API 5L gr B ($F_t \geq 415$ MPa

$F_y \geq 240$ MPa

$E_b = 200{,}000$ MPa

$= 200k$ MPa

OD = 28" = 711 mm

t_w = .375" = 9.5 mm

r_m = 692 mm

= 20950 mm²

11-18-99

REVISED FOR VULTRON #C612-4 walk in cabinet.

$\frac{OD^2 + ID^2}{4}$ = 248 mm

see p. 124-127

$\frac{(OD^4 - ID^4)}{32OD}$ = 3,634550 mm³ = 153.751³ mm³

$S\left(\frac{OD}{2}\right)$ = 189.61⁴ mm⁴

2I = 225.48⁴ mm⁴

$\frac{F_y}{E}\left(\frac{R}{t}\right) = \left(\frac{240}{200M}\right)\frac{\left(\frac{711-9.5}{2}\right)}{9.5} = .044 \leq .063 \therefore$

∴ compact section

$R_{torsion} = \frac{OD - t}{2} = 350$ mm

Addison CORPORATION

project	date 8-27-99
CONTRACT LOADING	engineer
	page 110

$$P_{A(max)} = (2.5kg + \overset{\text{sta } 330.5}{(2)2.275kg})9.80616\frac{m}{s^2} + .150kPa(1.7\times 9) \overset{use}{=} 72kN$$

M_{max} = snow + V_H

Reused for Vultron # C612-A

=	.15	.57 kNm
+	1.227	2.23
+	2.6	= 428.2
+	1.81	= 19.0
		use = 450 kNm

V_H = wind = $2.6kPa(3\times 9 + .7\times 4.6_{max}) = 78.6 \xrightarrow{use} 79kN$

T = torsional load = $P\times E = 70kN(1.4m) = 98 \xrightarrow{use} 100kNm$

$$f_a = \frac{P_a}{A} = \frac{72kN}{20950\,mm^2}\,\frac{10^6\,mm^2}{m^2}\,\frac{M}{10^3 K} = 3.4MPa = .014F_y$$

$$\frac{Kl}{r} = \frac{2.0(6.1m)}{248mm} \cong 50 < \sqrt{\frac{2\pi^2 E}{F_y}} \qquad \therefore F_a = .6F_y$$

$$= \sqrt{2\pi^2\,\frac{200MMPa}{240MPa}} = 128$$

Addison CORPORATION

project	date
	engineer
	page 111

$$f_b = \frac{M}{S} = \frac{450\,kN\,m}{153.75^3\,mm^3} \cdot \frac{10^6\,mm^3}{m^3} \cdot \frac{1\,M}{10^3\,k} = 124\,MPa \doteq .52F_y$$

$$\frac{F_y}{E}\left(\frac{R}{t}\right) = .044 \leq .1$$ Revised for n, ∴ $F_b = .66F_y$

C_A not used, Vulton #C612-A See Commentary p. 65, 1.3.3(

$$f_{v\,transverse} = \frac{79\,kN}{20.95} \qquad MPa = .02F_y$$

$$f_{v\,torsion} = \frac{M_z}{6.28R^2t} = \frac{100\,kN\,m}{6.28(351\,mm)^2\,9.5\,mm} \cdot \frac{10^9\,mm^3}{m^3} \cdot \frac{M}{10^3\,k}$$

$$= 13.4\,MPa = .06F_y$$

$$\frac{F_y}{E}\left(\frac{R}{t}\right)^{\frac{3}{2}} = \frac{240\,MPa}{82.7\,k\,MPa}\left(\frac{350}{9.5}\right)^{\frac{3}{2}} = .649 \therefore$$

$E_s = 12000\,ksi$
Blodget 2.10-1

$$F_v = .143\,E\left(\frac{t}{R}\right)^{3/2} = .143(82.7\,k\,MPa)\left(\frac{9.5}{350}\right)^{\frac{3}{2}} = 52.9\,MPa$$

$$= .22F_y$$

Addison CORPORATION

project	date
	engineer
	page 112

$$CSR_{post} = \frac{.014F_y}{.6F_y} + \frac{.52F_y}{.66F_y(1.4)} + \left(\frac{(.02+.06)F_y}{.22F_y(1.4)}\right)^2 = .66 \leq 1.0 \checkmark$$

max

calculate | YMS rota

Revised for Vultron C612-A

$$\phi\,(\text{radians}) = \frac{T}{E_s}$$

T) 10^{12} ~~mm⁴~~

$39.61)^4$ ~~mm⁴~~ 10^6 ~~mm⁴~~

/ra

∴ Torsional rotation = .162°

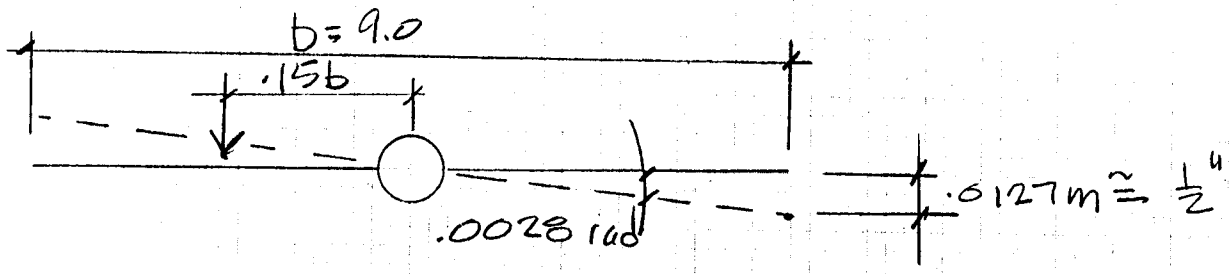

calculate post max deflection due to wind:

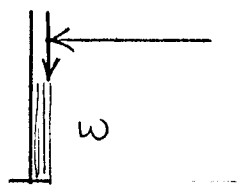

$$\Delta = dl_{VMS} + wind_{VMS} + wind_{post}$$

$$= \left[\overset{22.3\,kN}{(2.275)(9.8\,\tfrac{m}{s^2})\frac{1.0\,m}{6.1}} + \overset{67.9\,kN}{(2.6\,kPa)(3\times 8.7)} \right] \frac{6.1\,m^3}{3EI}$$

$$+ \frac{1.8\,kN/m\,(6.1\,m)^4}{8EI}$$

$$= \frac{(71.5\,kN)\,\ell^3}{3EI} + \frac{(11.0\,kN)\,\ell^3}{8EI}$$

$$= \frac{\ell^3}{3EI}\left(71.5\,kN + \frac{11.0\,kN}{8}\times 3\right)$$

$$= \frac{(6.1\,m)^{\cancel{3}\,2}\,82.5\,\cancel{kN}}{(\cancel{3})(\cancel{200}\,k\,\cancel{MPa})(189.61)^4\,\cancel{mm^4}} \qquad 10^{\cancel{+12}\,4}\,\frac{\cancel{mm^4}}{\cancel{m^{+2}}}$$

$$= .024\,m \cong 1''$$

base tt connection:

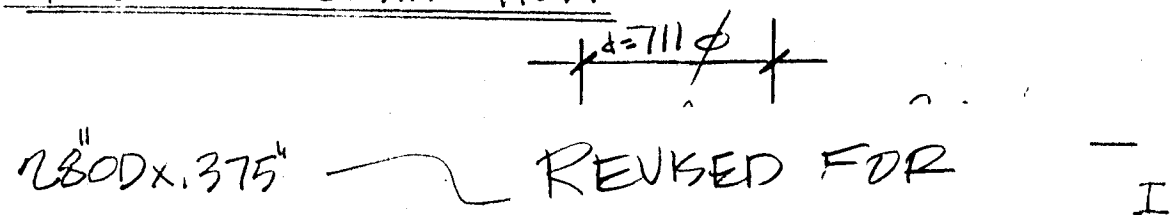

see p 127–129

treat welds as -6):

$$I_w = \frac{\pi d}{2} \qquad \frac{25^2}{2}) = 565M \text{ mm}^3$$

$$S_w = \frac{I_w}{c} \quad \text{where } c = \frac{\sqrt{711^2 + 25^2}}{2}$$

$$= \frac{565M}{335.7} \text{ mm}^3 = 1.588M \text{ mm}^2$$

$$A_w = 2\pi d = 2\pi(711) = 4468 \text{ mm}$$

$$J_w = (2)\frac{\pi d^3}{4} = 565M \text{ mm}^3$$

$$f_{resultant} = \sqrt{f_{bending}^2 + f_{torsion}^2 + f_{vert\ shear}^2}$$

Addison CORPORATION

project	date
CONTRACT LOADING	8-27-99
	engineer
	page 115

$$f_{resultant} = \sqrt{\left(\frac{M}{S_w}\right)^2 + \left(\frac{TC}{J_w}\right)^2 + \left(\frac{P}{A_w}\right)^2} \quad \frac{N}{mm}$$

$$= \sqrt{\left(\frac{450\,kNm}{1.588\,M\,mm^2}\right)^2 + \left(\frac{100\,kNm\left(\frac{711}{2}\,mm\right)}{565\,M\,mm^3}\right)^2 + \left(\frac{72\,kN}{4468\,mm}\right)^2}$$

$$= \sqrt{\left(\frac{450\,10^3}{1.588\,10^6}\,10^3\right)^2 \quad \left(\frac{2\times10^3\,N}{468}\right)^2}$$

233,4

Revised for Vultron walk-in cabinet #C612-A

$f_{resultant} = 29$

<u>fillet weld capac</u>

$\tau_{xx}) = 21\,ksi$

$= .6F_y$ @ base $= (.6)(35\,ksi) = 21\,ksi$

$= 145\,MPa$

$= 145\,M\,\frac{N}{m^2}$

$= 102.5\,\frac{N}{mm}(w)$ per lineal mm

$w =$ fillet weld size in mm

$= \frac{actual}{allowable}$

$= \frac{291}{102.5} = 2.8 < 8.0$

<u>Specify $\frac{8}{8}$ ▷</u> ; $f_c = \left(\frac{\frac{291}{8}}{240}\right) F_y = .15F_y$

Addison CORPORATION

project	date
	engineer
	page 116

base PL

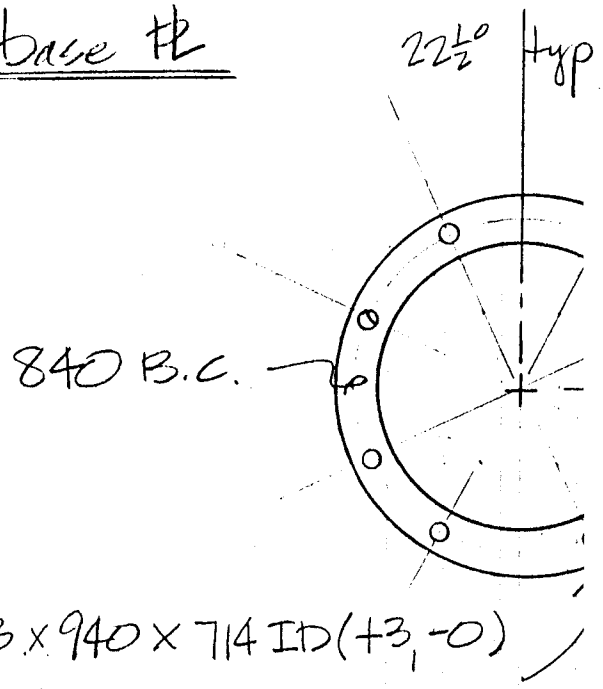

Revised for Vultron walk-in cabinet #C612-A

see p 130, 131.

38 x 940 x 714 ID (+3, -0)
A572 gr 50

PLAN VIEW

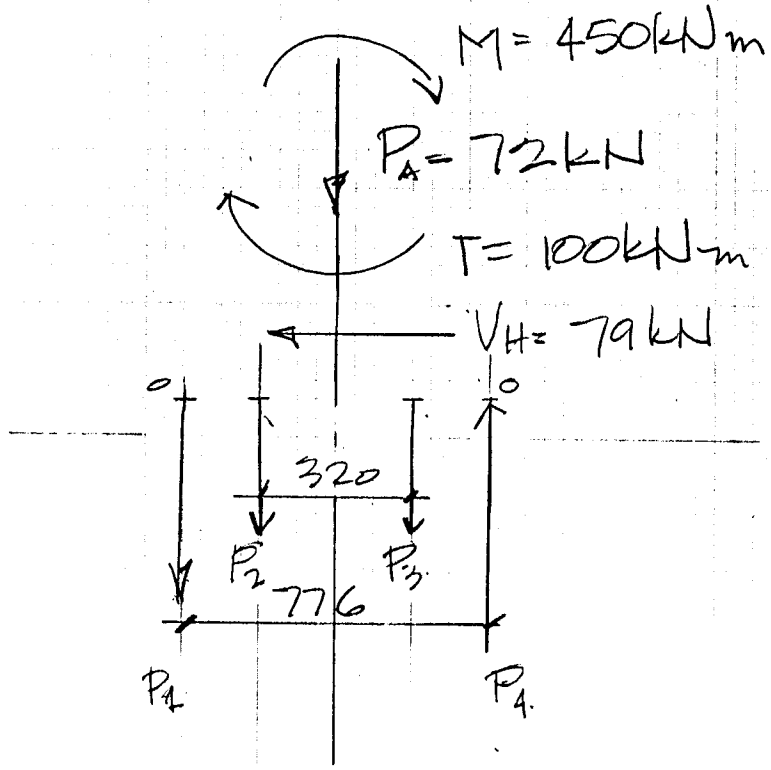

$\Sigma M_o = 0$ $\quad 450\,kNm - 72\,kN\left(\frac{.776}{2}\right) - P_1(.776) - P_2(.548)$

$- P_3(.228) = 0$

$P_1 + \frac{.548}{.776} P$ [illegible] (kNm)

Revised for Vultron walk-in #C612-A.

$\Sigma F_y = 0$ $\quad P_1 + P_2 + F$ (kN)

$P_2 = \frac{.548}{.776} \cdot P_1$

$P_3 = \frac{.228}{.776} P_1$

$P_1 + .706^2 P_1$

$P_1 = 344.2\ kN$

$P_2 = 243.1$

$P_3 = 101.1$

$P_4 = 760.4\ kN$

$F = \frac{P_4}{2ea} = 380.2\ kN$

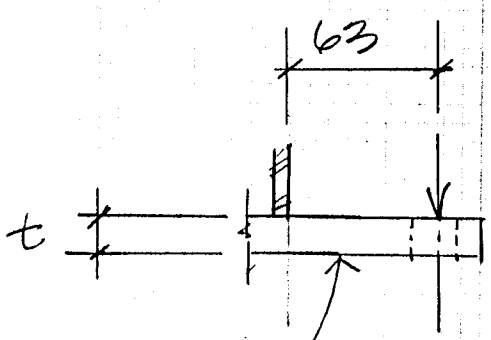

A572gr345

assume 2x width under HHN/HW = 150

$S = \frac{M}{F_b} = \frac{bt^2}{6} = \frac{(381\,kN)(.063\,m)}{(.66)345\,MPa\,(1.4)}$ — Article 1.26.1

$t^2_{min} = (3.$

$.66(3.$

$= 30$

$= 54.$

Revised to here

$\frac{Pa}{N} \cdot m^2 \quad 10^6 mm^2 / m^2$

Article 1.26.1

Anchor bolts: A449 ($F_y \geq 550$ MPa) $\times$ ~~1.40~~ do not use

$F_t = .50 F_y$

$F_v = .30 F_y$

$A_{1\frac{1}{2}\text{-}6UNC} = \frac{\pi}{4}\left(D - \frac{.9743}{6}\right)^2 = 1.41 i^2$

$= 906 mm^2$

$$\frac{f_{t_{max}}}{F_t}(\text{bending}) + \frac{f_v}{F_v}(\text{torsion}) + \frac{f_v}{F_v}(\text{shear}) \leq 1.0$$

$$f_t = \frac{\left(\frac{344.2 kN}{2 ea}\right)}{906 mm^2} \frac{10^6 mm^2}{m^2} \frac{N}{10^3 kN} = 190 MPa$$

for torsion: $\frac{100 kNm}{8 ea} = F_{tor}\left(\frac{.840 m}{2}\right)$ $F = 29.8 kN$

$$f_{torsion} = \frac{29.8 kN}{906 mm^2} \frac{10^6 mm^2}{m^2} \frac{N}{10^3 kN} = 33 MPa$$

Addison CORPORATION

project	date
	engineer
	page 119

$$f_v = \frac{79\,kN}{(8\,en)\,906\,mm^2} \cdot \frac{10^6\,mm^2}{m^2} \cdot \frac{M}{10^3\,k} = 11\,MPa$$

$\therefore$

$$\overset{.69}{\frac{190\,MPa}{(.50)(550\,MPa)}} + \overset{.27}{\frac{(33\,MPa + 11\,MPa)}{(.30)(550\,MPa)}} = .96 < 1.00 \checkmark$$

Addison CORPORATION

project	date
CONTRACT LOADING	engineer
	page 120

Fd N

reference: 1.) AASHTO Std Spec for Struct Spt for Highway Signs, ...
2.) HRB Bulletin 247 (Note: in English units)
3.) jobsite boring logs.

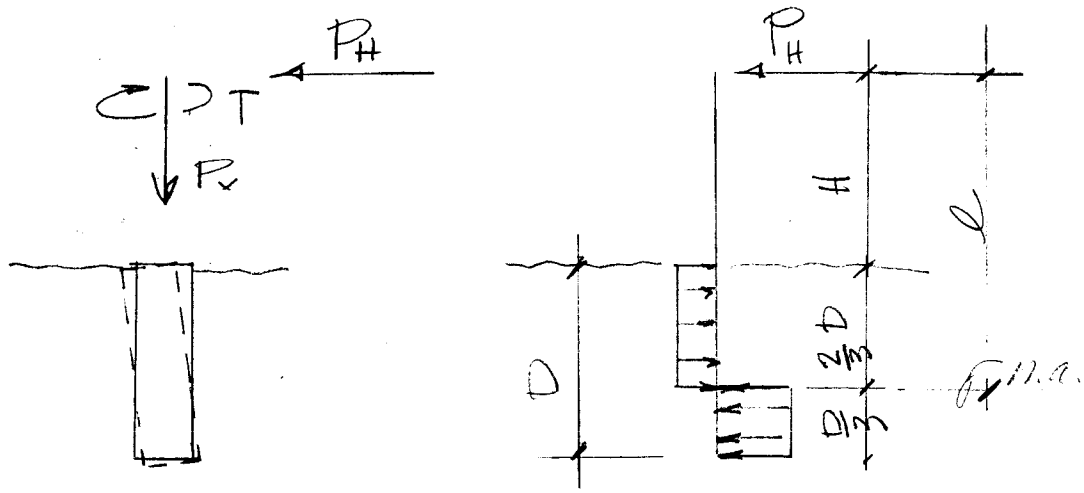

see Newton report dated 9-2-99: 3 pages

DAVID J. NEWTON ASSOCIATES
INCORPORATED

Civil and Geological Engineering Services

September 2, 1999
Project No. 888-101

Mr. James Tyvand
Addison Corporation
20576 Painters Court
Bend, Oregon 97708

SUPPLEMENTAL RECOMMENDATIONS ADDENDUM NO. 2
GEOTECHNICAL FOUNDATION DESIGN
FOR THREE HIGHWAY SIGNS
BOZEMAN, MONTANA

Dear Mr. Tyvand,

Based on the revised sign dimension provided to us on August 27, 1999, David J. Newton Associates, Inc. (DNA) has re-evaluated the proposed foundation systems for the three highway signs (designated S-311, S-330, and S-338) for the referenced project. This letter should be considered Amendment No. 2 for our August 18, 1999 letter. The revised dimensions and results of our evaluation are presented below.

PROJECT INFORMATION

DNA's understanding of the subsurface condition for each sign post is based on boring logs provided by you. At sign S-311, the soils consisted of 13 feet of silty clay overlying silty sand 26 feet below ground surface (bgs), with an assumed undrained shear strength for the upper silty clay equal to 1.5 kips per square foot (ksf). At sign S-330, field data indicated that the subsurface conditions were 9 feet of sandy silt overlying claystone to approximately 20 bgs, the depth of the boring. Based on the field data, the shear strength parameter for the sand silt was assumed to be a friction angle equal to 34 degrees, with a unit weight equal to 120 pounds per cubic foot (pcf). At sign S-338, the subsurface conditions were found to be a sandy gravel with boulders to 20 feet bgs, and the assumed engineering properties were a friction angle of 38 degrees and a total unit weight equal to 130 pcf. No groundwater was encountered in the borings.

Review of the revised data indicate that the signs will now be approximately 29.5 feet (9 meters) by 9.8 feet (3 meters), and that the S-311 and S-330 will be approximately 13.5 feet (4.1 meters) above the existing ground surface and S-338 will be approximately 15 feet (4.9 meters) above the existing ground surface.

1201 S.W. 12th Ave., Suite 400 • Portland, Oregon 97205 • (503) 228-7718 • FAX 228-7781
Engineering & Geological Principles Applied to Environmental, Drainage, Civil Works & Private Development Projects

Printed on recycled paper

The following live and dead loads were applied to each sign:

Live Loads: Wind: 55 pounds per square foot (psf) (horizontal)
Snow: 3 psf (vertical)

Moments (due to Wind): : S-311 - 310.9 kip-ft
S-330 - 310.9 kip-ft
S-338 - 332.9 kip-in

Torsion (due to Wind): 72 kip-foot

Dead Load: VMS + Structure 11 kips

RECOMMENDATIONS

The results of our calculations, using these revised dimensions, indicate that the following parameter for each sign:

Sign	Depth (ft)	Shape	Dimension	Rebar
S-311	10	Circle	36 inch Diameter	10 - No. 10
S-330	11	Square	48 inch x 48 inch	10 - No. 10
S-338	11	Square	48 inch x 48 inch	10 - No. 10

DNA understands that the deep foundations for signs S-330 and S-338 will be excavated with a backhoe to the specified depth. If the backfill material is required, then DNA recommends that the backfill be a self compacting, open graded, ¼- to ¾-inch crushed granular material, with less than 5 percent fines content.

LIMITATIONS

This letter should be considered Addendum No. 2 for our August 18, 1999 letter. Unless specifically addressed below in this letter, recommendations provided in our August 18, 1999 letter are still valid. This letter report is issued with the understanding that it is the responsibility of Addison Corporation to ensure that the information and recommendations contained in this report are incorporated in the plans, and the necessary steps are taken to see that the contractor and subcontractors carry out such recommendations in the field. Geotechnical engineering and the geologic sciences are characterized by a certain degree of uncertainty. Professional judgments presented are based partly on our understanding of the proposed construction, and partly on our general experience. Our engineering and geology work and judgments rendered meet current professional standards; no other warranties, either expressed or implied, are made. This report is subject to review and should not be relied upon after a period of 3 years.

It has been a pleasure providing geotechnical services to you on this project. Please call if you have any questions 1-888-228-7728.

Sincerely,

DAVID J. NEWTON ASSOCIATES

REGISTERED PROFESSIONAL ENGINEER
17857PE
OREGON
JULY 25, 1995
CYNTHIA L. HOVIND

Cynthia L. Hovind, P.E.
Project Geotechnical Engineer

EXPIRES: 6/30/07

Attachments - Engineering Calculations

(2) Addressee

h:\888\101\correspondence\99sept2geotrpt.doc

Addison CORPORATION

project	date 9-3-99
	engineer
	page 121

(10) #10 on $(36-2(2+\frac{1}{2})-1\frac{1}{4})$: $29\frac{3}{4}''$

42 plf

$A_{\#10} = 1.23\,i^2 = 4.18$ plf

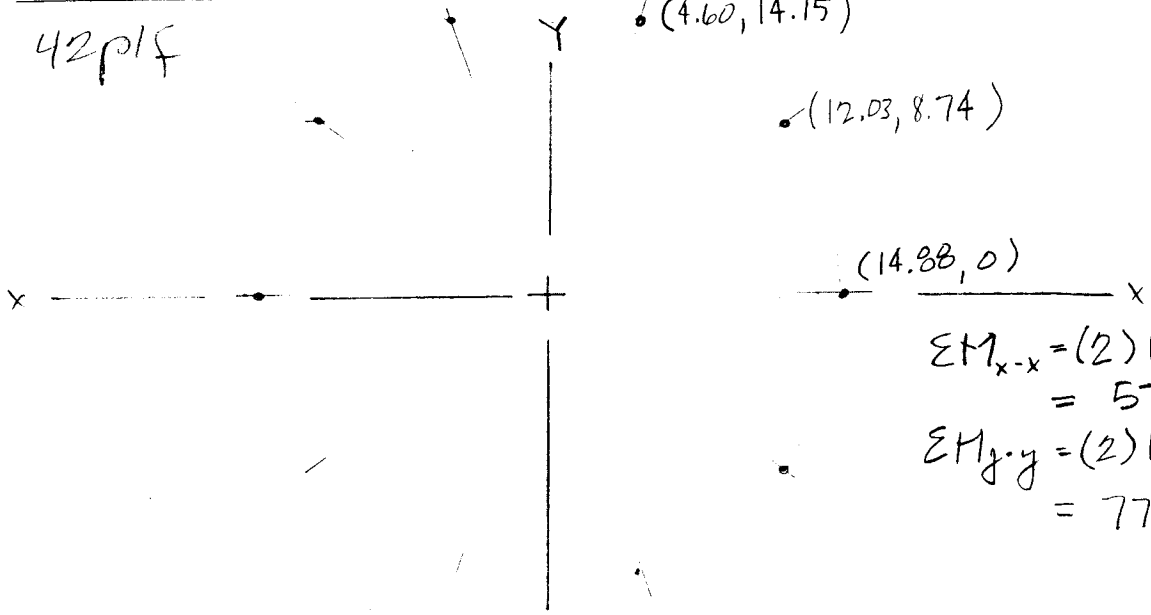

$\Sigma M_{x-x} = (2)1.23(8.74) + (2)1.23(14.7$
$= 57.79\,i^3$

$\Sigma M_{y-y} = (2)1.23(4.6+12.03+14.88)$
$= 77.51\,i^3 \rightarrow$ governs

(8) #14 on $(36-2(2+\frac{1}{2})-1\frac{3}{4})$: $29\frac{1}{4}''$

66 plf

$A_{\#14} = 2.41\,i^2 = 8.18$ plf

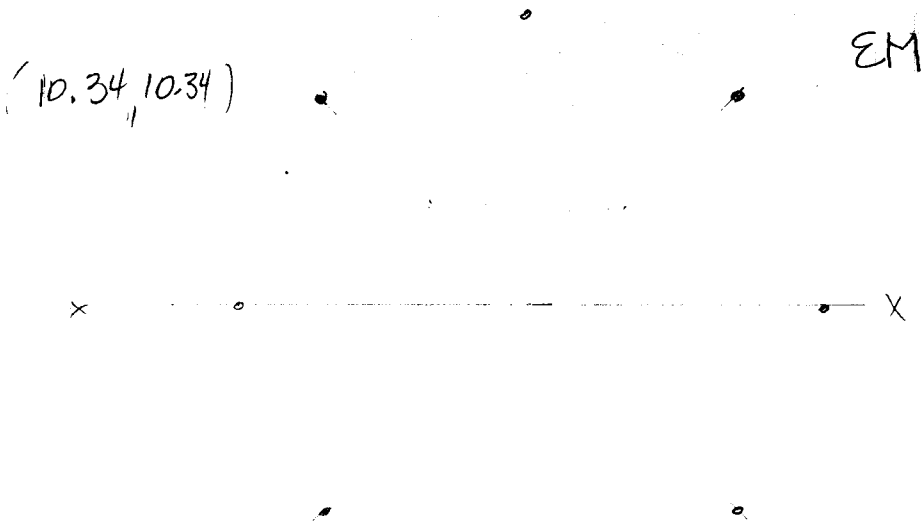

$\Sigma M_{x-x} = \Sigma M_{y-y} = 2(2.41)(10.34)$
$+ 2.41\left(\frac{29\frac{1}{4}}{2}\right)$
$= 85.09\,i^3$ ✓

19947

Addison CORPORATION

project I90 Safe Passage	date 11-18-99
VULTRON WALK-IN CABINET #C612-A	engineer
	page 122

Snow + Ice =.

TRUSS

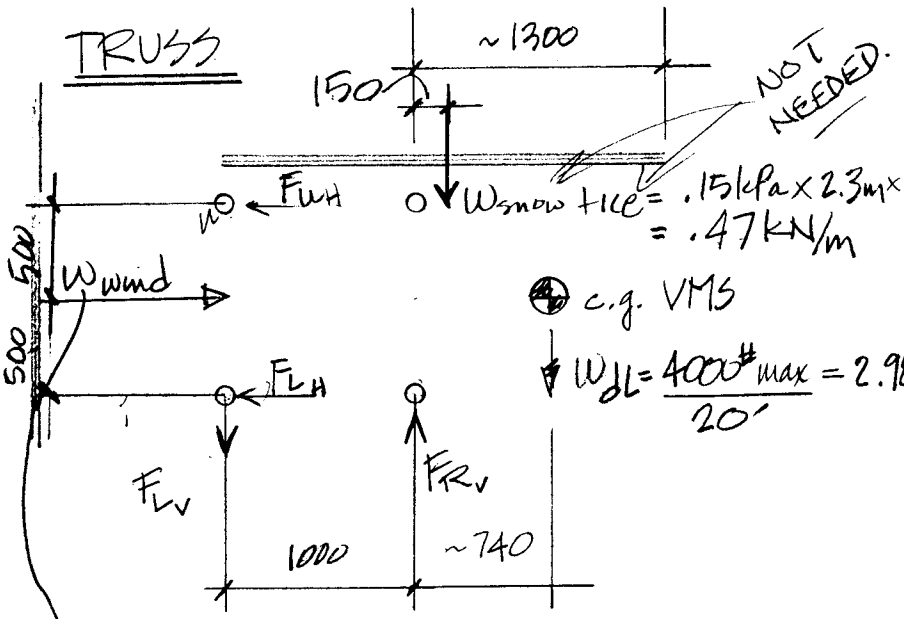

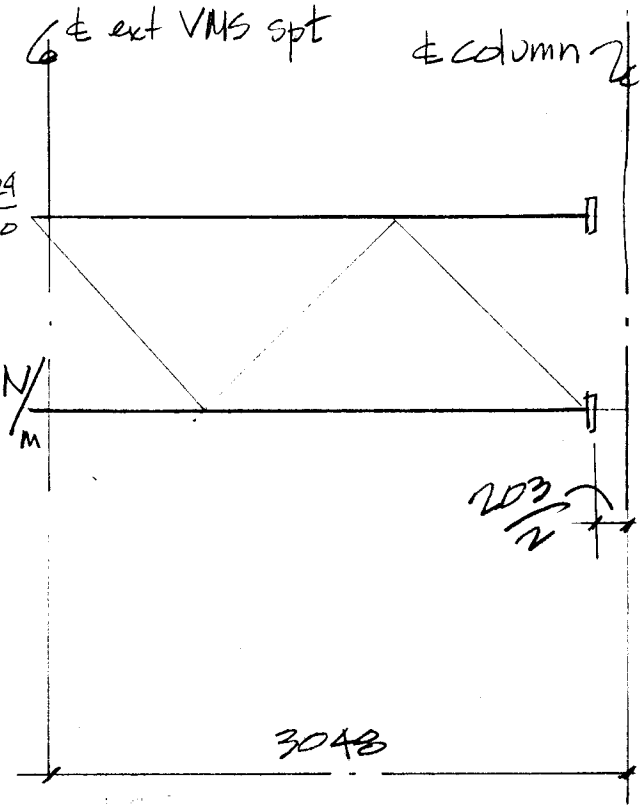

$$wind(unit) = \frac{2.6kPa \times 2.8m \times 8.24m}{6.10} = 9.84 \ kN/m$$

$$\Sigma M_L = 0 = 9.84(500) + .47(1150) + 2.98(1740) - (F_{RV} + F_{UH})1000 \Rightarrow F_{RV} + F_{UH} = 10.65$$

$$\Sigma F_H = 0 = 9.84 - F_{UH} - F_{LH} \Rightarrow \quad F_{UH} + F_{LH} = 9.83; \ F_{UH} = F_{LH} = \frac{9.84}{2} = 4.92$$

$$\Sigma F_V = 0 = F_{RV} - F_{LV} - .47 - 2.98 \Rightarrow F_{RV} - F_{LV} = 3.45$$

$$F_{RV} = 10.65 - 4.92 = 5.73$$

$$F_{LV} = F_{RV} - 3.45 = 5.73 - 3.45 = 2.28$$

as a check:

$$\Sigma M_{R_V} = .47(150) + 2.98(740) - \underset{2.28}{F_{LV}}(1000) - \underset{4.92}{F_{UH}}(1000) + 9.84(500) = 0 \checkmark$$

$$M_{max} = \frac{wl^2}{2}$$

18,366 ft lbs.

$$M_{x-x} = \frac{5.73\ kN/m \left(\frac{3048 - \frac{203}{2}}{1000}\right)^2}{2} = 24.9\ kNm$$

15,784 ft lbs.

$$M_{y-y} = \frac{4.92\ kN/m \left(\downarrow \right)^2}{2} = 21.4\ kNm$$

see p 107:

$$f_a = \frac{M_{max}}{A \times 1.0m} = \frac{\left(\frac{24.9\ kNm}{1\ chord} + \frac{21.4}{1\ chord}\right)}{1436\ mm^2} = 32{,}200\ \frac{kN}{m^2}$$

$f_a = 32.2\ MPa = .08\ F_y$ ✓ (lower than contract loading)

By inspection, shear loads lower than those created by contract loading.

∴ CONTRACT LOADING DETAILS @ TRUSS SUPPORT VULTRON WALK-IN # C612-A.

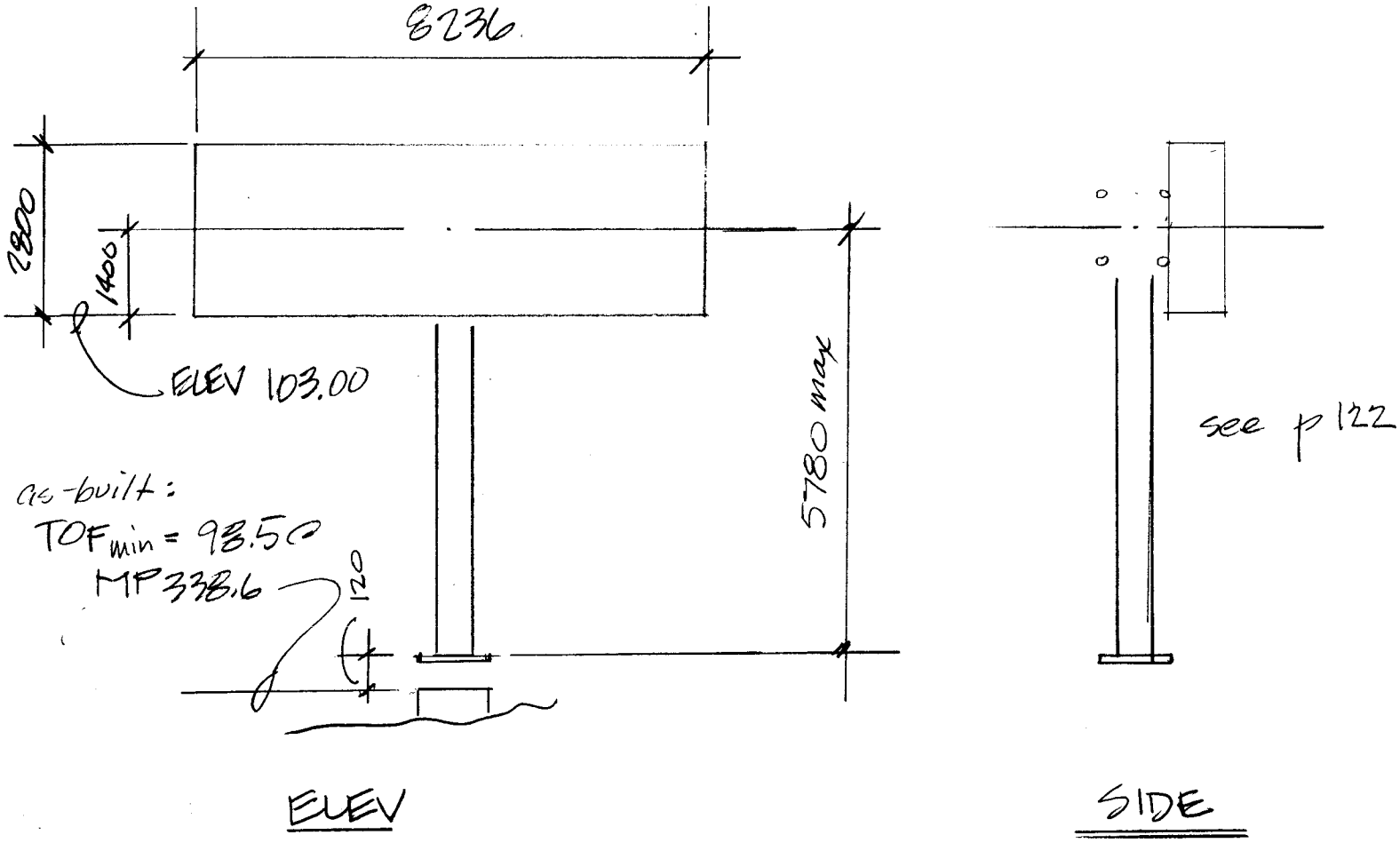

see p110:

$P_A(max) = (2.5kg + (2)1.9kg)9.80616 + .15kPa(3.6 \times 8.3) = 66.3 \Rightarrow$ use 70 kN

M_{max} = snow + VMS_{dL} + wind$_{sign}$ + wind$_{post}$

$= .47 \times (\frac{1000}{2} + 150) \times 6.10$ = 1.9

$+ 2.98 \times 6.10 \times (740 + 500)$ = 22.6

$+ 9.84 \times 6.10 \times (5780)$ = 347.

$+ 1.8 \frac{kN}{m} \times \frac{4.4^2 max}{2}$ = 17.4

= 388.9 ⟶ use 400 kN

$V_{H\,wind} = 2.6\,kPa\,(2.8 \times 8.24 + .7 \times 4.4_{max}) = 68 \longrightarrow$ use 70kN

$Torsional = P \times E = 66.3\,kN \times .15(8.24) = 81.9 \longrightarrow$ use 85kNm

POST LOADS: 1.4.1(E)1 $\quad CSR = \frac{f_a}{.6F_y} + \frac{f_b}{.4F_b(1.40)} + \left(\frac{f_v}{F_v(1.40)}\right)^2 \leq 1.0$

Article 1.2.6

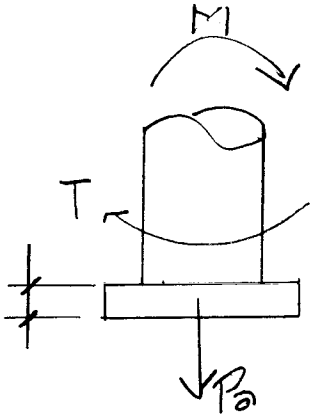

24" OD x .375" A53 gr B ($F_t \geq 415$ MPa

$F_y \geq 240$ MPa

$E_b = 200{,}000$ MPa

$= 200k$ MPa

$OD = 24" = 610\,mm$

$t_w = .375" = 9.5\,mm$

$ID = 591\,mm$

$A = 17922\,mm^2$

$r_{gyration} = \sqrt{\frac{OD^2 + ID^2}{4}} = 212\,mm$

$S = \frac{\pi(OD^4 - ID^4)}{32\,OD} = 1.38.37^3\,mm^3$

$I = S\frac{OD}{2} = 126.64^4\,mm^4$

$J = 2I = 150.60^4\,mm^4$

$\frac{F_y}{E}\left(\frac{R}{t}\right) = \left(\frac{240}{200M}\right)\frac{\left(\frac{610-9.5}{2}\right)}{7.5} = .037 \leq .063$

$\therefore$ compact section.

$K_{torsion} = \frac{OD - T}{2} = \frac{610 - 9.5}{2} = 300$

$$f_a = \frac{P_a}{A} = \frac{70\,kN}{1772\,mm^2}\;\frac{10^6\,mm^2}{m^2}\;\frac{M}{10^3 k} = 3.9\,MPa = .017F_y$$

$$@\ \frac{Kl}{r} = \frac{2.0(5.9m)}{212mm} = 56, \quad F_a = .6F_y$$

$$f_b = \frac{M}{S} = \frac{400\,kNm}{138.3^3\,mm^3}\;\frac{10^9\,mm^3}{m^3}\;\frac{1M}{10^3K} = 152\,MPa = .63F_y$$

$$\frac{F_y}{E}\left(\frac{R}{t}\right) = .038 \le .063 \quad \therefore \text{compact section}, \quad \therefore F_b = .66F_y$$

C_A not used where $H \le 50'$ (15m). See commentary p. 65, 1.3.3.(A)1.

$$f_{v\,transverse} = \frac{70\,kN}{17.92k\,mm^2}\;\frac{106\,mm^2}{m^2} = 3.9\,MPa = .02F_y$$

$$f_{v\,torsion} = \frac{M_z}{6.28R^2t} = \frac{85\,kNm}{6.28(300mm)^2\,9.5mm} = 15.8\,MPa = .07F_y$$

$$\frac{F_y}{E}\left(\frac{R}{t}\right)^{\frac{3}{2}} = \frac{240\,MPa}{82.7k\,MPa}\left(\frac{300}{9.5}\right)^{\frac{3}{2}} = .515$$

$E_s = 12{,}000\,ksi$
Blodgett 2.10-1

$$F_v = .143E\left(\frac{t}{R}\right)^{\frac{3}{2}} = .143(82.7k\,MPa)\left(\frac{9.5}{300}\right)^{\frac{3}{2}} = 66.7\,MPa$$
$$= .28F_y$$

$$CSR_{post} = \frac{.017F_y}{.6F_y} + \frac{.63F_y}{.66F_y(1.4)} + \left(\frac{(.02+.07)F_y}{.28F_y(1.4)}\right)^2 = .74 \le 1.0 \checkmark$$

Max VMS rotation due to wind:

$$\phi(\text{radians}) = \frac{ML}{E_s J} = \frac{85\,kNm\,(5.8m)}{82.7k\,MPa\,(2)(126.64)^4}$$

$$= .0116 \text{ radians} = .664°$$

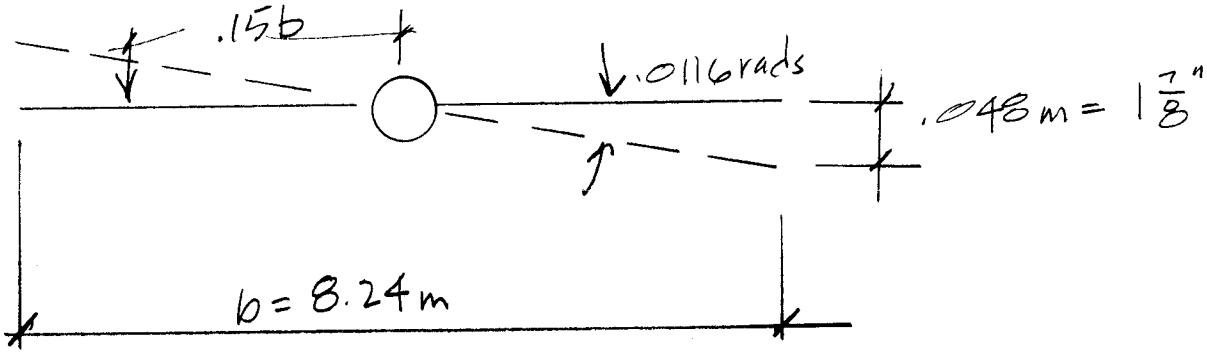

BASE PL CONNECTION

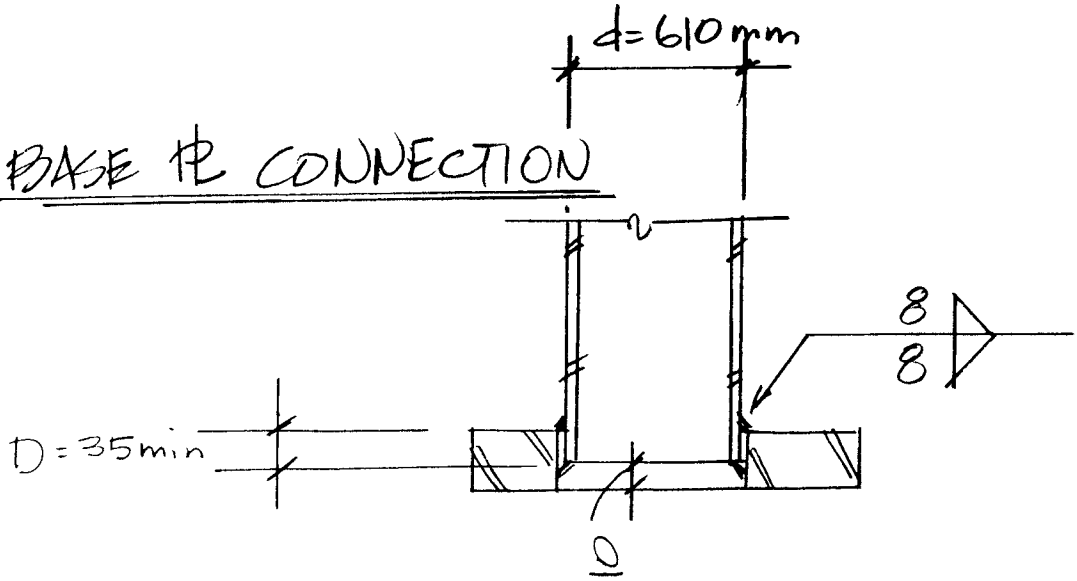

treat welds as a line (Blodget 7.4-6):

$$I_w = \frac{\pi d}{2}\left(D^2 + \frac{d^2}{2}\right) = \frac{\pi\, 610}{2}\left(35^2 + \frac{610^2}{2}\right) = 179M \text{ mm}^3$$

$$S_w = \frac{I_w}{c} \quad \text{where } c = \frac{\sqrt{610^2 + 35^2}}{2} = 305.5\text{ mm}$$

$$= \frac{179M}{305.5}\text{ mm}^3 = .58\text{ mm}^2$$

$$A_w = \pi d = \pi\, 610 = 1916\text{ mm}$$

$$J_w = \frac{2\pi d^3}{4} = 356M \text{ mm}^3$$

$$f_{resultant} = \sqrt{f_{bending}^2 + f_{torsion}^2 + f_{vert\,shear}^2}$$

$$= \sqrt{\left(\frac{M}{S_w}\right)^2 + \left(\frac{Tc}{J_w}\right)^2 + \left(\frac{P}{A_w}\right)^2}$$

$$= \sqrt{\left(\underset{689.7}{\frac{400}{.58}}\right)^2 + \left(\underset{72.9}{\frac{(85\text{kN}\cdot 305.5\text{mm})\,10^3\text{mm}}{356M\ \text{mm}^2\ \text{mT}}}\right)^2 + \left(\underset{36.5}{\frac{70\text{kN}}{1916\text{mm}}}\right)^2}$$

$$= 694.5\ \frac{N}{mm}$$

fillet weld capacity $= .3F_t$ @ filler $= .3(70xx) = 21$ ksi

$= .6F_y$ @ base $= (.6)(35\text{ksi}) = 21$ ksi

$= 145$ MPa

$= 145M\ \frac{N}{m^2}$

$= 102.5\frac{N}{mm}$ (w) per lineal mm.

w = fillet weld size in mm

$= \frac{\text{actual}}{\text{allowable}}$

$= \frac{695}{102.5} = 6.7 < 8.0$

specify $\frac{8}{8}$; $f_c = \frac{\frac{695}{8} F_y}{240} = .36 F_y$ ✓

19947

Addison CORPORATION

project	date 11-18-99
VULTRON #C612-A	engineer
	page 130

base PL

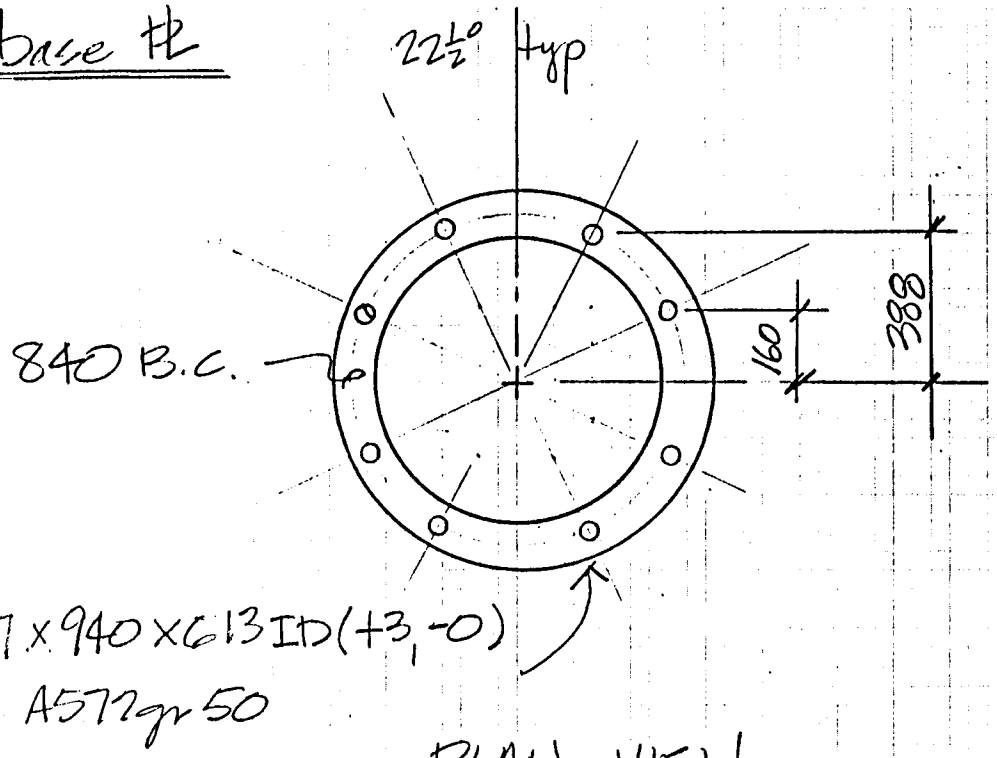

PLAN VIEW

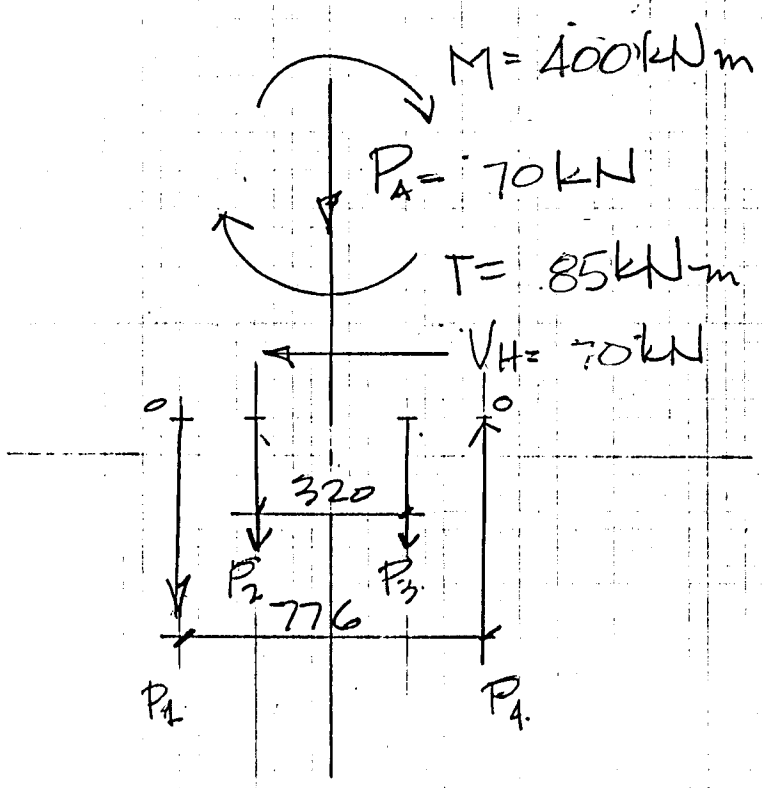

$\Sigma M_o = 0 \quad 400\,kNm - 70\,kN\left(\frac{.776}{2}\right) - P_1(.776) - P_2(.548) - P_3(.228) = 0$

$P_1 + \frac{548}{776}P_2 + \frac{228}{776}P_3 = 480.5$

$\Sigma F_y = 0 \quad P_1 + P_2 + P_3 + 70 - P_4 = 0$

$P_2 = \frac{548}{776}P_1$

$P_3 = \frac{228}{776}P_1$

$P_1 + .706^2 P_1 + .294^2 P_1 = 480.5$

$1.58P_1 = 480.5$

$P_1 = 304.1$

$P_2 = 214.8$

$P_3 = 89.4$

$P_4 = 678.3\ kN$

$\frac{(840-610)}{2} = 115$

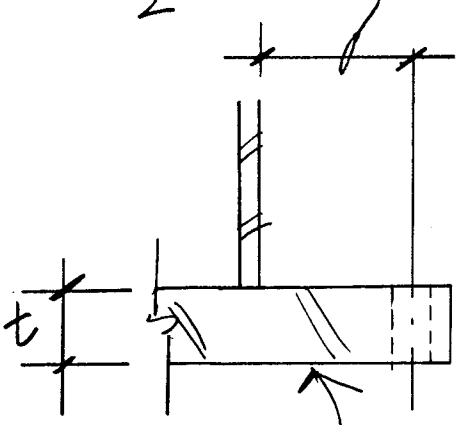

A572 gr 345

$F = \frac{P_4}{2ea} = 339.2\,kN$

assume 3x width under HHN/HW = 225

$S = \frac{M}{Fb} = \frac{bt^2}{6} = \frac{(339.2\,kN)(115\,mm)}{(.66)(345\,MPa)(1.4)}$ ← Article 1.26.1

$t^2_{min} = 3263\ mm^2$

$t_{min} = 57.1\ mm$ (2.25" = 2 1/4" ✓)