DRAWING NO.	DESCRIPTION
C612-G01	28 X 144 SIGN OVERVIEW RH DOOR
C612-G02	28 X 144 PARTS PLACEMENT RH DOOR
C612-G03	28 X 144 CONTROL BOX WIRING DIAGRAM
C612-G04	28 X 144 LOAD CENTER DIAGRAM RH DOOR
C612-G05	28 X 144 SIGN DISPLAY WIRING RH DOOR
C612-H01	28 X 144 SIGN OVERVIEW LH DOOR
C612-H02	28 X 144 PARTS PLACEMENT LH DOOR
C612-K01	28 X 72 SIGN OVERVIEW RH DOOR
C612-K02	28 X 72 PARTS PLACEMENT RH DOOR
C612-K03	28 X 72 LOAD CENTER DIAGRAM RH DOOR
C612-K04	28 X 72 SIGN DISPLAY WIRING RH DOOR
C612-L01	28 X 72 SIGN OVERVIEW LH DOOR
C612-L02	28 X 72 PARTS PLACEMENTS LH DOOR

STATE OF MONTANA

IFB NO.: IFB00-042P
VARIABLE MESSAGE SIGNS

VULTRON INCORPORATED

DIGI-DOT™

JOB #C612C
07-18-00

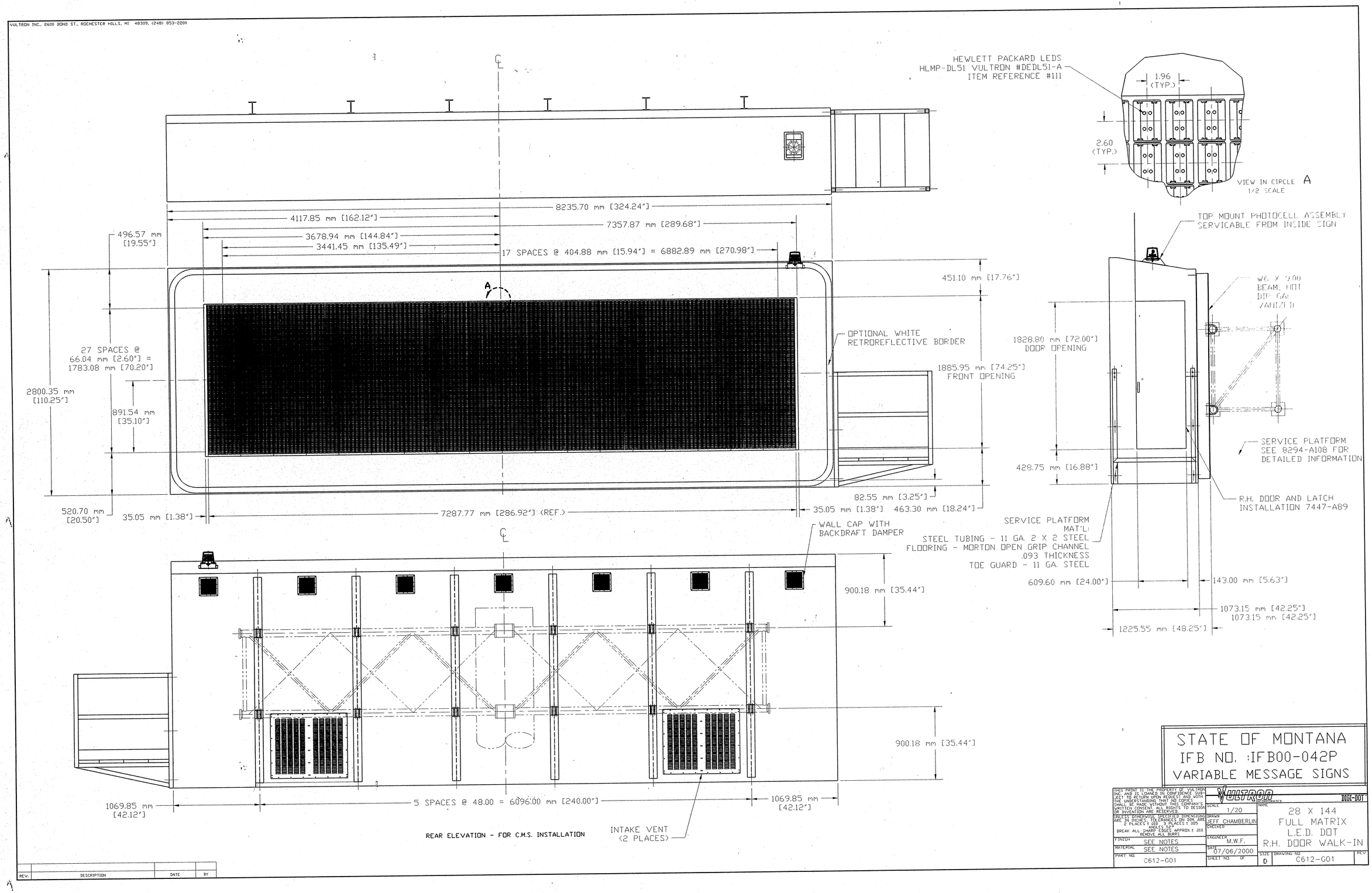
VULTRON INC., 2600 BOND ST., ROCHESTER HILLS, MI 48309, (248) 853-2200
HEWLETT PACKARD LEDS
HLMP-DL51 VULTRON #DEDL51-A
ITEM REFERENCE #111
1.96 (TYP.)
2.60 (TYP.)
VIEW IN CIRCLE A
1/2 SCALE
8235.70 mm [324.24"]
4117.85 mm [162.12"]
7357.87 mm [289.68"]
3678.94 mm [144.84"]
3441.45 mm [135.49"]
17 SPACES @ 404.88 mm [15.94"] = 6882.89 mm [270.98"]
496.57 mm [19.55"]
451.10 mm [17.76"]
27 SPACES @ 66.04 mm [2.60"] = 1783.08 mm [70.20"]
2800.35 mm [110.25"]
891.54 mm [35.10"]
OPTIONAL WHITE RETROREFLECTIVE BORDER
1885.95 mm [74.25"] FRONT OPENING
1828.80 mm [72.00"] DOOR OPENING
428.75 mm [16.88"]
TOP MOUNT PHOTOCELL ASSEMBLY SERVICABLE FROM INSIDE SIGN
W6 X 9.00 BEAM, HOT DIP GAL VANIZED
SERVICE PLATFORM SEE 8294-A108 FOR DETAILED INFORMATION
R.H. DOOR AND LATCH INSTALLATION 7447-A89
82.55 mm [3.25"]
520.70 mm [20.50"]
35.05 mm [1.38"]
7287.77 mm [286.92"] (REF.)
35.05 mm [1.38"]
463.30 mm [18.24"]
WALL CAP WITH BACKDRAFT DAMPER
SERVICE PLATFORM MAT'L:
STEEL TUBING - 11 GA. 2 X 2 STEEL
FLOORING - MORTON OPEN GRIP CHANNEL .093 THICKNESS
TOE GUARD - 11 GA. STEEL
609.60 mm [24.00"]
143.00 mm [5.63"]
1073.15 mm [42.25"]
1073.15 mm [42.25"]
1225.55 mm [48.25"]
900.18 mm [35.44"]
900.18 mm [35.44"]
1069.85 mm [42.12"]
5 SPACES @ 48.00 = 6096.00 mm [240.00"]
1069.85 mm [42.12"]
REAR ELEVATION - FOR C.M.S. INSTALLATION
INTAKE VENT (2 PLACES)
STATE OF MONTANA
IFB NO. :IFB00-042P
VARIABLE MESSAGE SIGNS
THIS PRINT IS THE PROPERTY OF VULTRON INC. AND IS LOANED IN CONFIDENCE SUBJECT TO RETURN UPON REQUEST AND WITH THE UNDERSTANDING THAT NO COPIES SHALL BE MADE WITHOUT THIS COMPANY'S WRITTEN CONSENT. ALL RIGHTS TO DESIGN OR INVENTION ARE RESERVED.
UNLESS OTHERWISE SPECIFIED DIMENSIONS ARE IN INCHES. TOLERANCES ON DIM. ARE 2 PLACES ± .010 3 PLACES ± .005 ANGLES ± 2°
BREAK ALL SHARP EDGES APPROX. ± .010 REMOVE ALL BURRS
FINISH SEE NOTES
MATERIAL SEE NOTES
PART NO. C612-G01
VULTRON INCORPORATED
DIGI-DOT
SCALE 1/20
DRAWN JEFF CHAMBERLIN
CHECKED
ENGINEER M.W.F.
DATE 07/06/2000
SHEET NO. OF
NAME 28 X 144 FULL MATRIX L.E.D. DOT R.H. DOOR WALK-IN
SIZE D
DRAWING NO. C612-G01
REV.
REV. DESCRIPTION DATE BY

VULTRON INC., 2600 BOND ST., ROCHESTER HILLS, MI 48309, (248) 853-2200

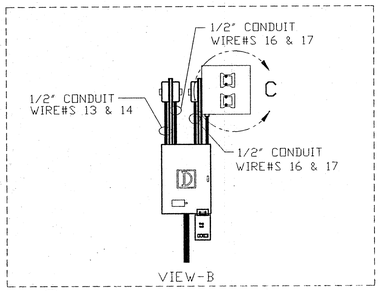

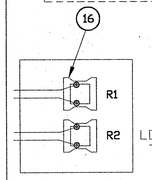

VIEW IN CIRCLE "C"

LOOKING THROUGH ROOF OF SIGN

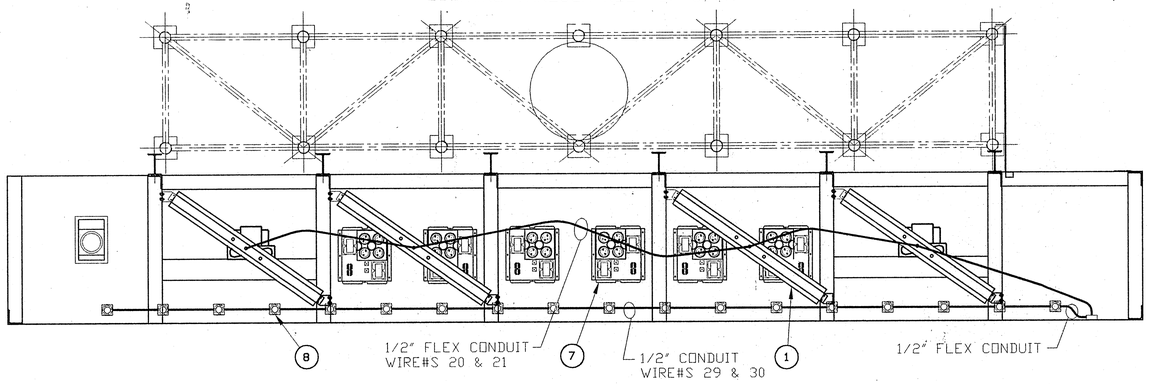

DET #	DESCRIPTION	QTY	VULTRON PART#	SUPPLIER	SUPPLIER OR ASS'Y PART#	ITEM REF. #
16	GENERAL PURPOSE RELAY 120VAC	2	SW1570		CDS RR3PA	113
15	OCTAGON GANG BOX	3	EC2783			
14	HEAT TAPE	24FT	HEATER-13	MCMASTER CARR	35535K37	122
13	EDCO SURGE PROTECTOR	1	EC2868	EDCO	EMC-240B	
12	SQUARE-D LOAD CENTER 100 AMP MAIN BREAKER	1	9633-A16	SQUARE-D	QO120M100	109
11	SUB FLOOR CIRCULATION FAN	2	FAN-40	GRAINGER	5C530	102
10	GFI OUTLET	5	EC2726	HUBBELL	GF153621	103
9	LIGHT SWITCH	1	EC2727	GRAINGER	5Z778	124
8	3" FAN	18	FAN-5	GLOBE MOTORS	A31-B15A-15T3-000	121
7	POWER SUPPLY BOX WITH TWO TRANSFORMERS	6	A700-A05			
6	HOT THERMOSTAT	1	SW1530	GRAINGER	2E158	125
5	HUMIDISTAT	1	SW1544	GRAINGER	2E574	123
4	COLD THERMOSTAT	1	SW1510	GRAINGER	4E036	136
3	LIGHTNING ARRESTOR	1	EC2778	DELTA	LA302	106
2	HOFFMAN BOX	1	EC2907		A-SE8X8X4NK	105
1	FLOURESCENT LIGHT	4	LT2060		LB-240-120-CW20	104

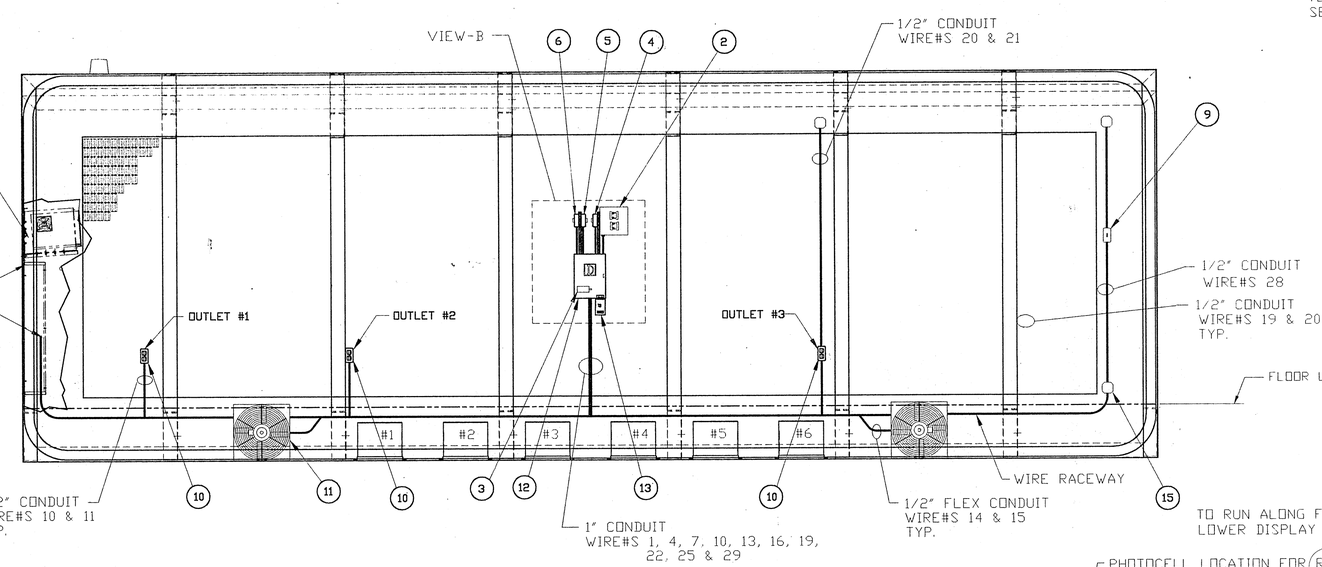

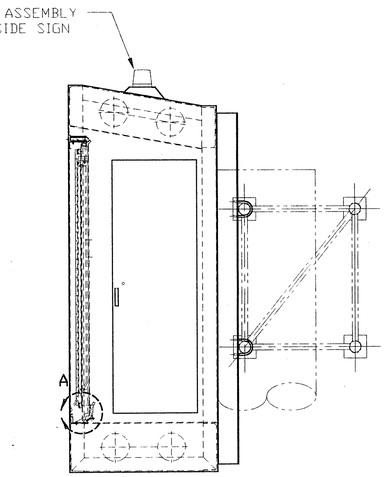

PHOTOCELL LOCATION FOR RIGHT HAND DOOR

LT

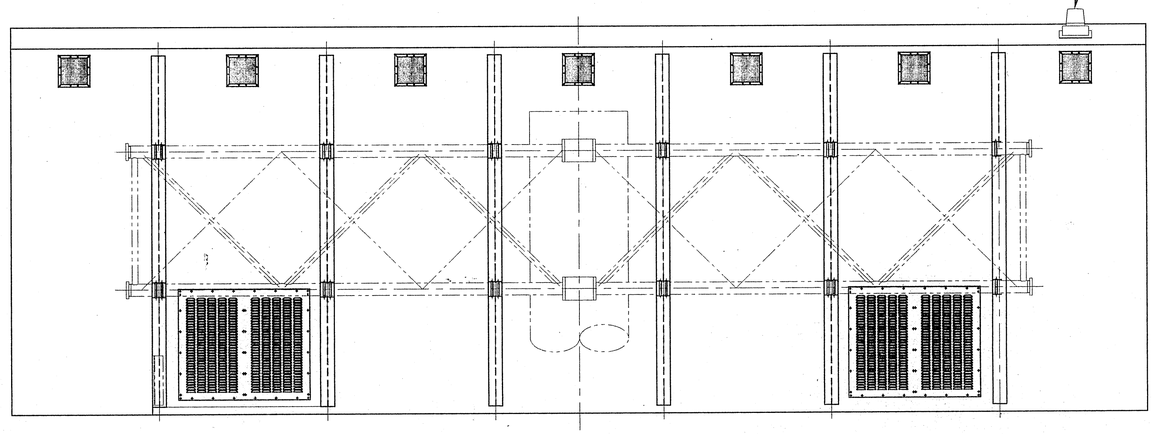

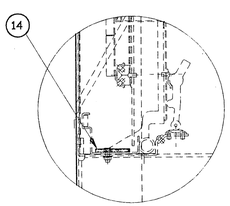

VIEW A
1/4 SCALE

PART	VULTRON NUMBER	QTY.
1/2" CONDUIT	SP1769	30 FT
1/2" CONDUIT COUPLING	SP1767	8
1/2" FLEX CONDUIT	SP1711	40 FT
1/2" FLEX CONDUIT COUPLING	SP1708	2
1" CONDUIT	SP1776	3 FT
1" CONDUIT COUPLING	SP1779	2

STATE OF MONTANA
IFB NO. IFB00-042P
VARIABLE MESSAGE SIGNS

THIS PRINT IS THE PROPERTY OF VULTRON INC. AND IS LOANED IN CONFIDENCE SUBJECT TO RETURN UPON REQUEST AND WITH THE UNDERSTANDING THAT NO COPIES SHALL BE MADE WITHOUT THIS COMPANY'S WRITTEN CONSENT. ALL RIGHTS TO DESIGN OR INVENTION ARE RESERVED.

UNLESS OTHERWISE SPECIFIED DIMENSIONS ARE IN INCHES, TOLERANCES ON DIM. ARE:
2 PLACES ± .010 3 PLACES ± .005
ANGLES ± 0°25'
BREAK ALL SHARP EDGES APPROX ± .010
REMOVE ALL BURRS

FINISH	SEE NOTES
MATERIAL	SEE NOTES
PART NO.	C612-G02

VULTRON INCORPORATED — DIGI-DOT

SCALE	1/18
DRAWN	JEFF CHAMBERLIN
CHECKED	
ENGINEER	GEORGE LEAF
DATE	07/06/2000
SHEET NO.	OF

NAME: 28 X 144 FULL MATRIX L.E.D. DOT PARTS PLACEMENT (R. H. DOOR)

SIZE D — DRAWING NO. C612-G02 — REV.

REV.	DESCRIPTION	DATE	BY
A			

VULTRON INC., 2600 BOND ST., ROCHESTER HILLS, MI 48309, (248) 853-2200

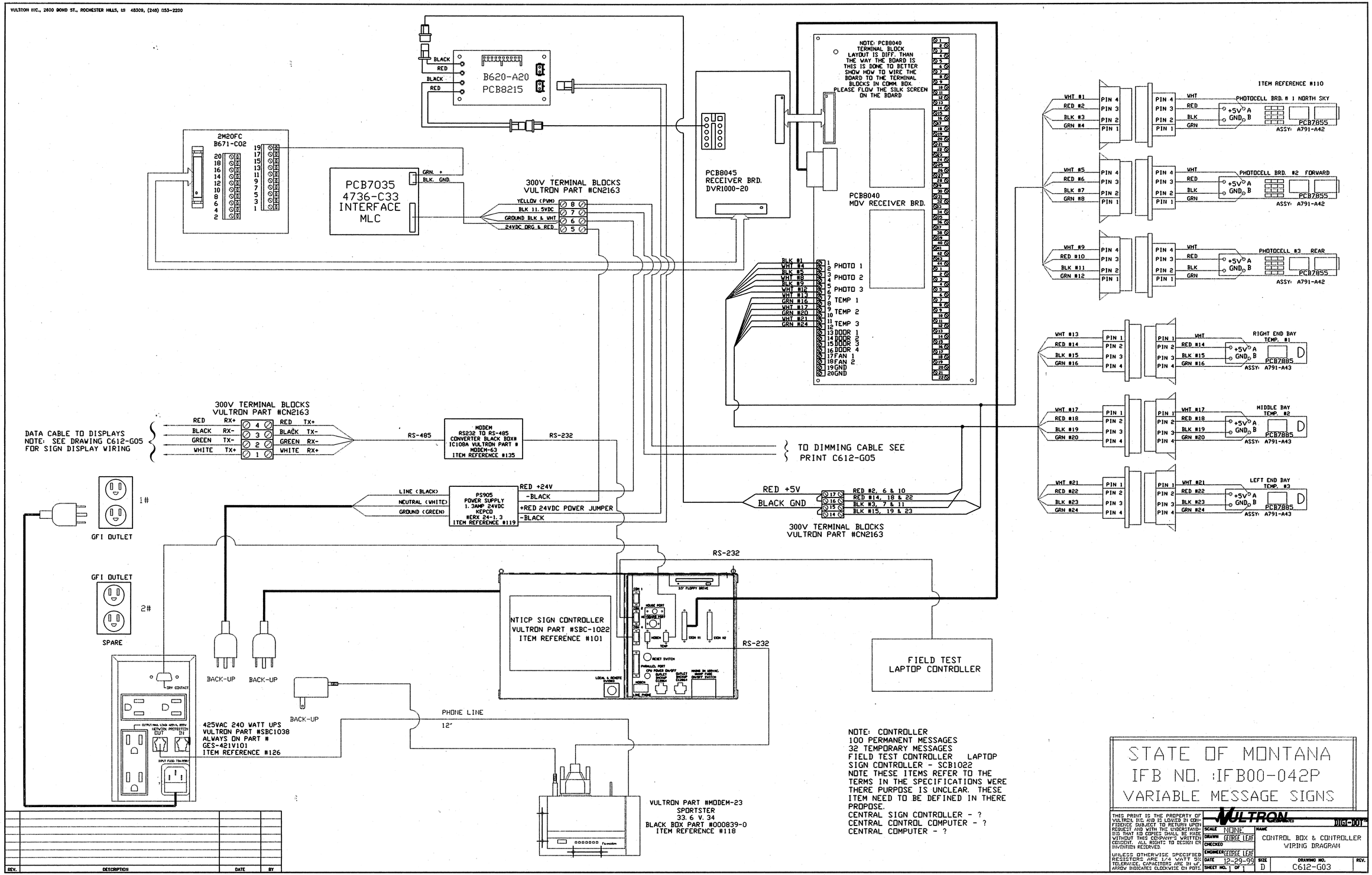

VULTRON INC., 2500 BOND ST., ROCHESTER HILLS, MI 48309, (248) 853-2200

INCOMING 120 VAC
(SUPPLIED BY OTHERS)

BREAKER#	SIZE	SQUARE D#	NOTE	
1	20AMP	QO120HM	HIGH MAGNETIC	128
2	20AMP	QO120HM	HIGH MAGNETIC	128
3	20AMP	QO120HM	HIGH MAGNETIC	128
4	15AMP	QO115		129
5	15AMP	QO115		129
6	15AMP	QO115		129
7	15AMP	QO115		129
8	15AMP	QO115		129
9	15AMP	QO115		129
10	15AMP	QO115		129

CURRENT DRAW FOR SIGN (DOT POWER) - 28.8 AMPS @ 120VAC
CURRENT DRAW FOR SIGN (LED POWER) - 16.1 AMPS @ 120VAC
CURRENT DRAW FOR COOLING SYSTEM - 8.3 AMPS @ 120VAC
CURRENT DRAW FOR HEATING SYSTEM - 6.9 AMPS @ 120VAC
CURRENT DRAW FOR LIGHTS - 2.6 AMPS @ 120VAC
CURRENT DRAW FOR OUTLETS - 7.5 AMPS @ 120VAC
CURRENT DRAW FOR ELECTRONICS - 2.0 AMPS @ 120VAC
TOTAL CURRENT - 72.2AMPS @ 120VAC

RELAY PIN OUT

RELAY BASE

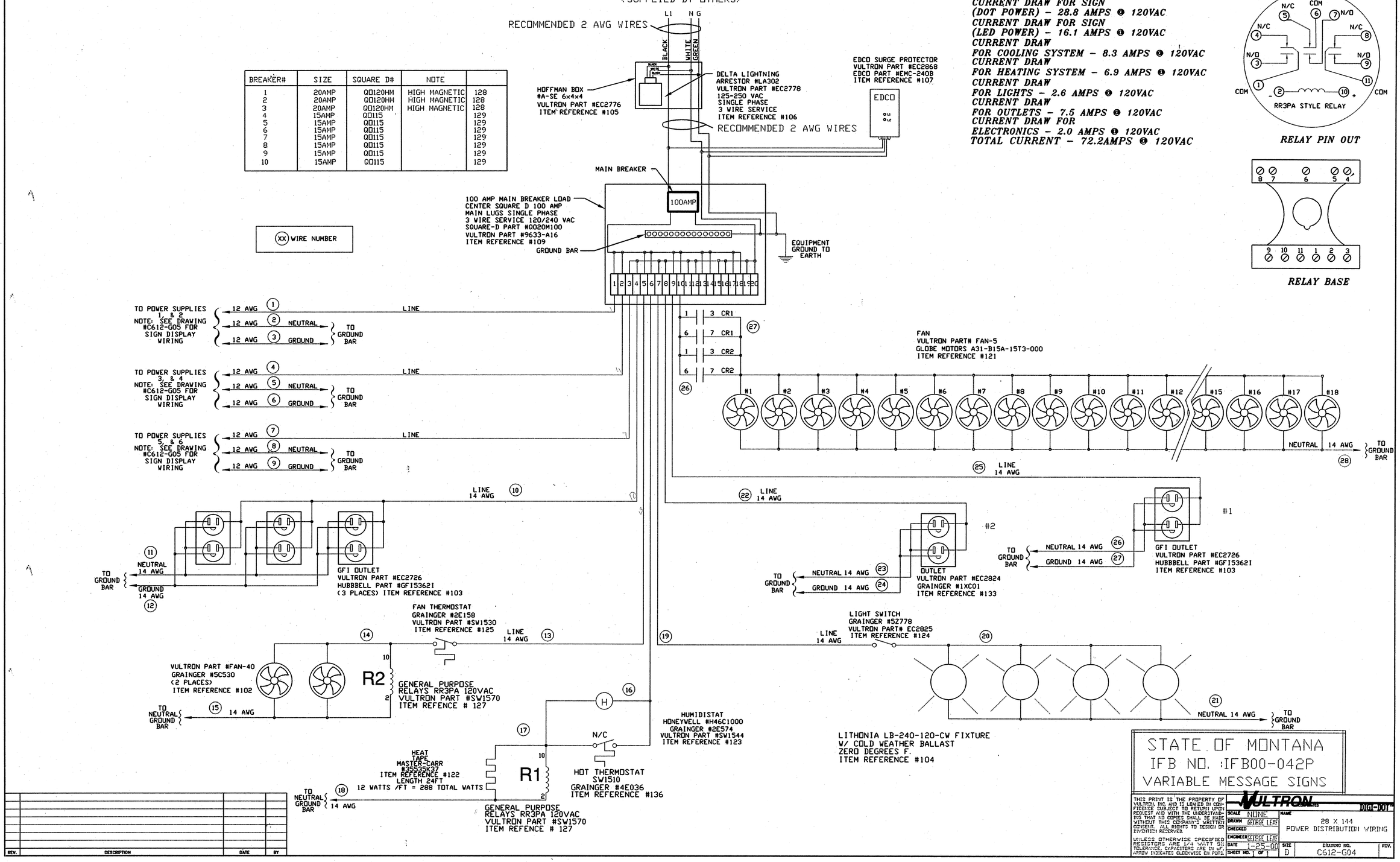

REV.	DESCRIPTION	DATE	BY

STATE OF MONTANA
IFB NO. :IFB00-042P
VARIABLE MESSAGE SIGNS

THIS PRINT IS THE PROPERTY OF VULTRON, INC. AND IS LOANED IN CONFIDENCE SUBJECT TO RETURN UPON REQUEST AND WITH THE UNDERSTANDING THAT NO COPIES SHALL BE MADE WITHOUT THIS COMPANY'S WRITTEN CONSENT. ALL RIGHTS TO DESIGN OR INVENTION RESERVED.

UNLESS OTHERWISE SPECIFIED RESISTORS ARE 1/4 WATT 5% TOLERANCE, CAPACITORS ARE IN µF. ARROW INDICATES CLOCKWISE ON POTS.

VULTRON

SCALE	NONE
DRAWN	GEORGE LEAF
CHECKED	
ENGINEER	GEORGE LEAF
DATE	1-25-00
SHEET NO.	1 OF 1
NAME	28 X 144 POWER DISTRIBUTION WIRING
SIZE	D
DRAWING NO.	C612-G04
REV.	

VULTRON INC., 2600 BOND ST., ROCHESTER HILLS, MI 48309, (248) 853-2200

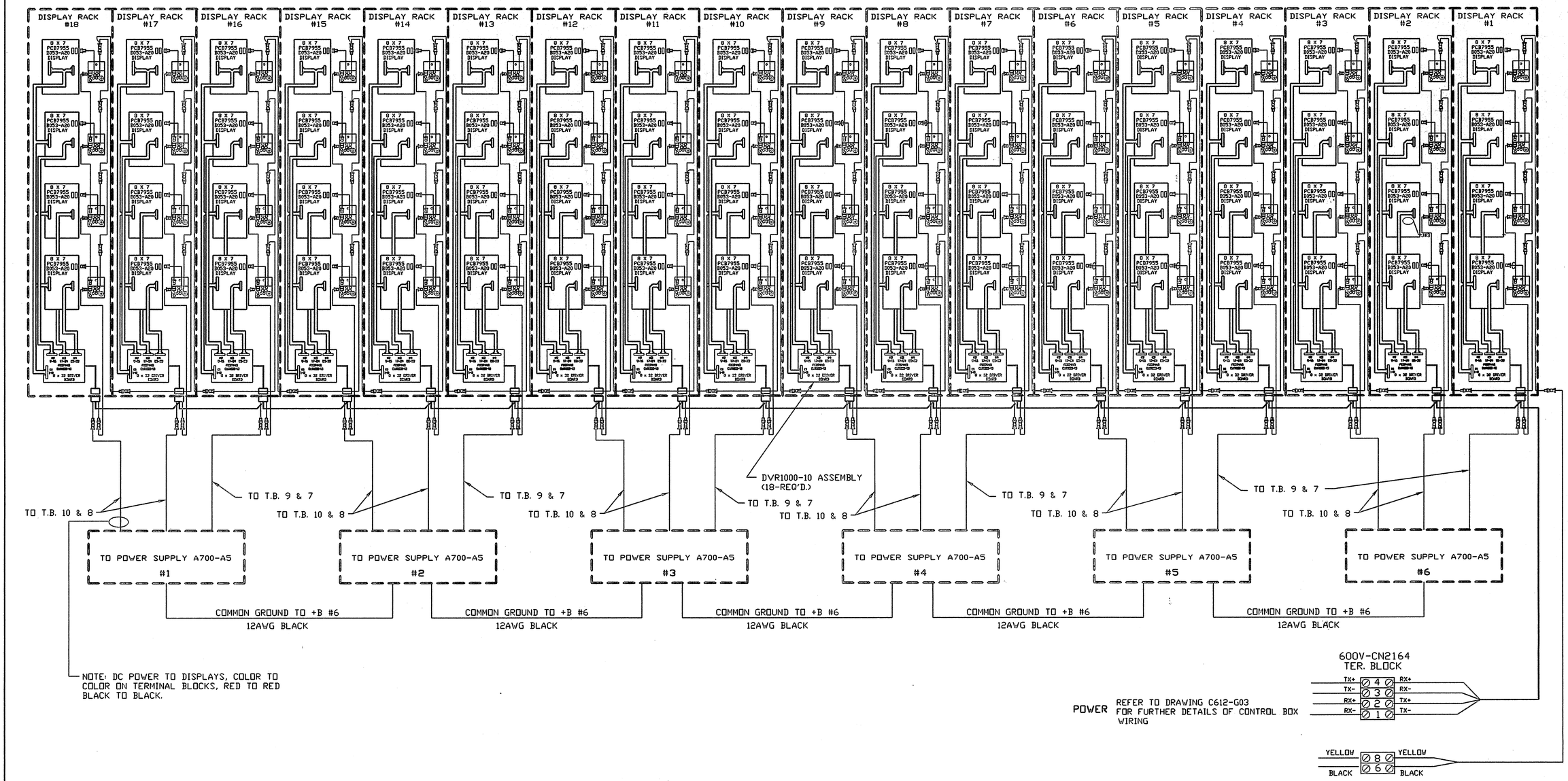

NOTE:
FOR SIGN PARTS PLACEMENT SEE DRAWING C612-G02

NOTE:
FOR CONTROL PANEL WIRING SEE DRAWING C612-G03

NOTE:
FOR POWER DISTRIBUTION SEE DRAWING C612-G04

REV.	DESCRIPTION	DATE	BY

STATE OF MONTANA
IFB NO. :IFB00-042P
VARIABLE MESSAGE SIGNS

THIS PRINT IS THE PROPERTY OF VULTRON, INC AND IS LOANED IN CONFIDENCE SUBJECT TO RETURN UPON REQUEST AND WITH THE UNDERSTANDING THAT NO COPIES SHALL BE MADE WITHOUT THIS COMPANY'S WRITTEN CONSENT. ALL RIGHTS TO DESIGN OR INVENTION RESERVED.

UNLESS OTHERWISE SPECIFIED RESISTORS ARE 1/4 WATT 5% TOLERANCE, CAPACITORS ARE IN uF. ARROW INDICATES CLOCKWISE ON POTS.

VULTRON INCORPORATED

DIG-DOT

SCALE	NONE
DRAWN	GEORGE LEAF
CHECKED	
ENGINEER	GEORGE LEAF
DATE	10-18-99
SHEET NO.	1 OF 1

NAME: 28 ROWS X 114 COLUMNS DISPLAY TO DRIVER WIRING DIAGRAM PROPOSAL

SIZE: D

DRAWING NO.: C612-G05

REV.

VULTRON INC., 2600 BOND ST., ROCHESTER HILLS, MI 48309, (248) 853-2200

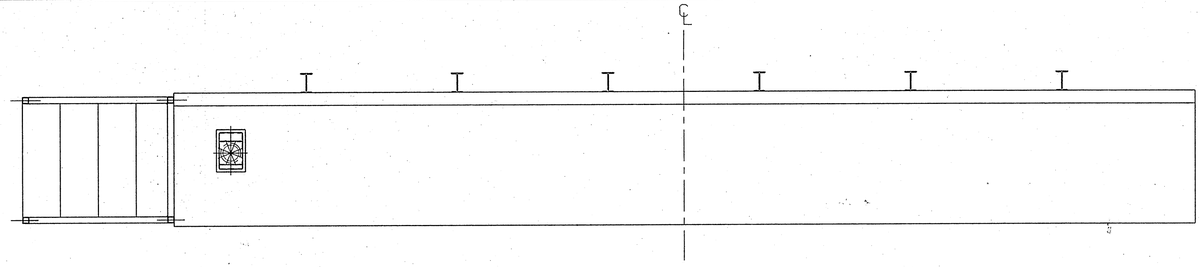

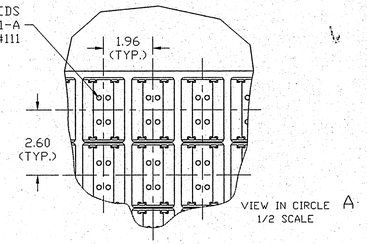

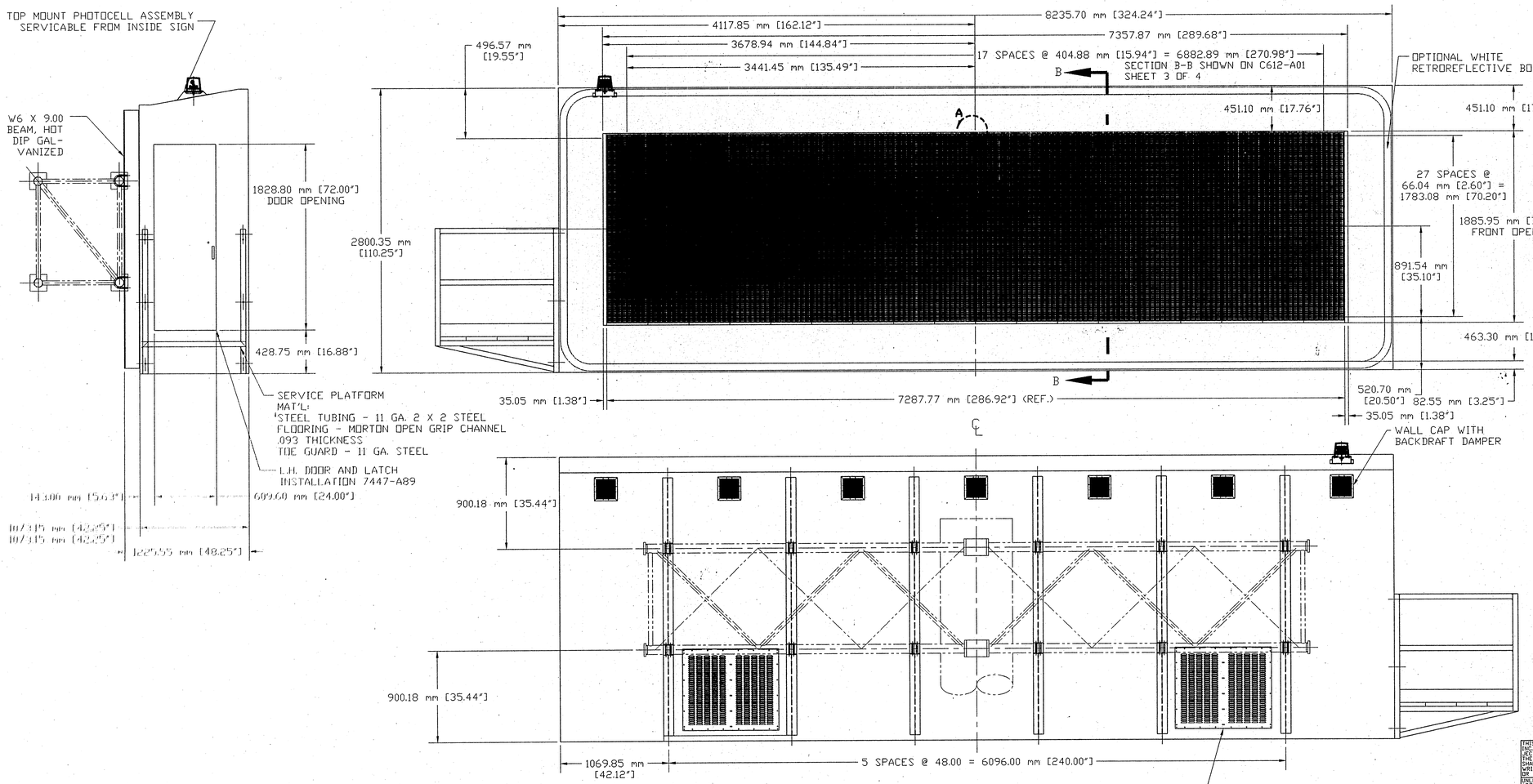

REAR ELEVATION - FOR C.M.S. INSTALLATION

NOTES
1. DISPLAY TECHNOLOGY: VULTRON LED-DOT
'LED' ENHANCED REFLECTIVE DISC.
2. COLOR:
   A. REFLECTIVE SURFACE: SCOTCHLITE
      DIAMOND GRADE REFLECTIVE SHEETING (YELLOW)
      ITEM REFERENCE #134
   B. NON REFLECTIVE SURFACE: PIXEL-BLACK NORYL
   C. BACK GROUND AND BORDERS-BLACK ENAMEL
3. SIGN CONFIGURATION: 28 X 144 FULL MATRIX
4. HOUSING MATERIAL:
   A. EXTRUSIONS: ALUMINUM ALLOY 6061T6
   B. SKIN AND FORMED STRUCTURAL COMPONENTS:
      ALUMINUM ALLOY 5052-H32
   C. THICKNESS: SKIN .12"(3.08mm)
   D. WELDING: ALL WELDING SHALL BE BY
      THE INERT GAS PROCESS, AND PERFORMED BY
      CERTIFIED WELDERS TO MEET PRIME COMMERCIAL
      STANDARDS FOR STRUCTURES.
   E. FLOORING: 3/4" THICK PLYWOOD WITH SLIP
      RESISTANT COATING
5. ESTIMATED WEIGHT OF THE SIGN NOT TO
   EXCEED 2245.282 KG (4950 LBS)
6. HOUSING FINISH SCHEDULE:
   A. CLEANING AND DEGREASING:
      GREAT LAKES NO RINSE PRE PAINT CLEANER
      PRETREATMENT ITEM REFERENCE #115
   B. BASE COAT: SHERWIN WILLIAM'S B58W10 B58V
      EPOXY MASTIC COATING INSIDE AND OUT
      ITEM REFERENCE #116
   C. TOP COATS(2): INSIDE AND OUT 'COROTHANE II'
      FEDERAL STANDARD GRAY FRONT FACE:
      'COROTHANE II' FEDERAL STANDARD BLACK
      ITEM REFERENCE #112
   D. ABOVE MATERIAL TO BE APPLIED
      IN STRICT CONFORMANCE TO MANUFACTURE
      PROCEDURES
7. VENTILATION: FANS: 2 UNDER FLOOR FANS OF
   1050 CFM EACH WHICH PROVIDE A MINIMUM OF
   2.5 AIR CHANGES PER MINUTE
   ITEM REFERENCE #102
8. FILTERS: HOG HAIR FILTER MEDIA
   GRAINGER PART #5C432 VULTRON
   PART # FAN-53 ITEM REFERENCE #120

STATE OF MONTANA
IFB NO. :IFB00-042P
VARIABLE MESSAGE SIGNS

THIS PRINT IS THE PROPERTY OF VULTRON INC. AND IS LOANED IN CONFIDENCE SUBJECT TO RETURN UPON REQUEST AND WITH THE UNDERSTANDING THAT NO COPIES, NEGATIVES OR POSITIVES WILL BE MADE WITHOUT WRITTEN CONSENT. ALL RIGHTS TO DESIGN OR INVENTION ARE RESERVED.

UNLESS OTHERWISE SPECIFIED DIMENSIONS ARE IN INCHES. TOLERANCES ON DIM. ARE 2 PLACES ± .010 3 PLACES ± .005 ANGLES ±2°
BREAK ALL SHARP EDGES APPROX ± .010 REMOVE ALL BURRS

FINISH	SEE NOTES
MATERIAL	SEE NOTES
PART NO.	C612-H01

Vultron INCORPORATED — DIGI-DOT

SCALE	1/20
DRAWN	JEFF CHAMBERLIN
CHECKED	
ENGINEER	M.W.F.
DATE	07/06/2000
SHEET NO. OF	
NAME	28 X 144 FULL MATRIX L.E.D. DOT L.H. DOOR WALK-IN
SIZE	D
DRAWING NO.	C612-H01
REV.	

REV.	DESCRIPTION	DATE	BY

VULTRON INC., 2600 BOND ST., ROCHESTER HILLS, MI 48309, (248) 853-2200

LOOKING THROUGH ROOF OF SIGN

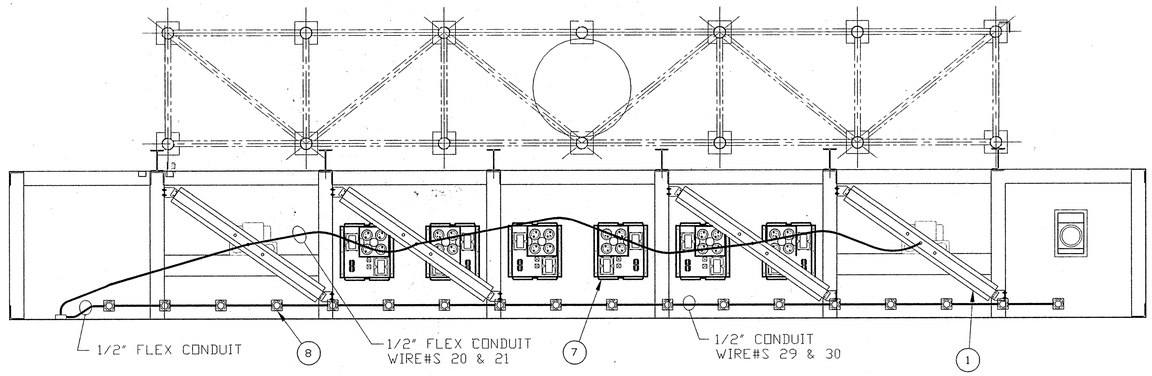

DET #	DESCRIPTION	QTY	VULTRON PART#	SUPPLIER	SUPPLIER OR ASS'Y PART#	ITEM REF. #
16	GENERAL PURPOSE RELAY 120VAC	2	SW1570		CDS RR3PA	113
15	OCTAGON GANG BOX	3	EC2783			
14	HEAT TAPE	24FT	HEATER-13	MCMASTER CARR	35535K37	122
13	EDCO SURGE PROTECTOR	1	EC2868	EDCO	EMC-240B	
12	SQUARE-D LOAD CENTER 100 AMP MAIN BREAKER	1	9633-A16	SQUARE-D	QD120M100	109
11	SUB FLOOR CIRCULATION FAN	2	FAN-40	GRAINGER	5C530	102
10	GFI OUTLET	5	EC2726	HUBBELL	GF153621	103
9	LIGHT SWITCH	1	EC2727	GRAINGER	5Z778	124
8	3" FAN	18	FAN-5	GLOBE MOTORS	A31-B15A-15T3-000	121
7	POWER SUPPLY BOX WITH TWO TRANSFORMERS	6	A700-A05			
6	HOT THERMOSTAT	1	SW1530	GRAINGER	2E158	125
5	HUMIDISTAT	1	SW1544	GRAINGER	2E574	123
4	COLD THERMOSTAT	1	SW1510	GRAINGER	4E036	136
3	LIGHTNING ARRESTOR	1	EC2778	DELTA	LA302	106
2	HOFFMAN BOX	1	EC2907		A-SE8X8X4NK	105
1	FLOURESCENT LIGHT	4	LT2060		LB-240-120-CW20	104

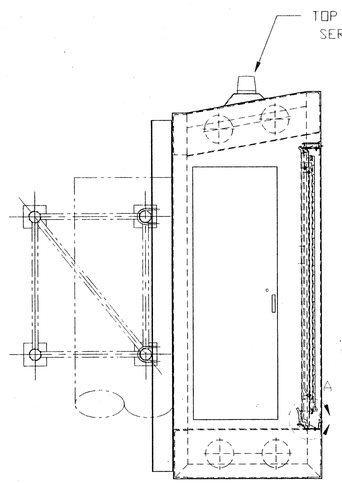

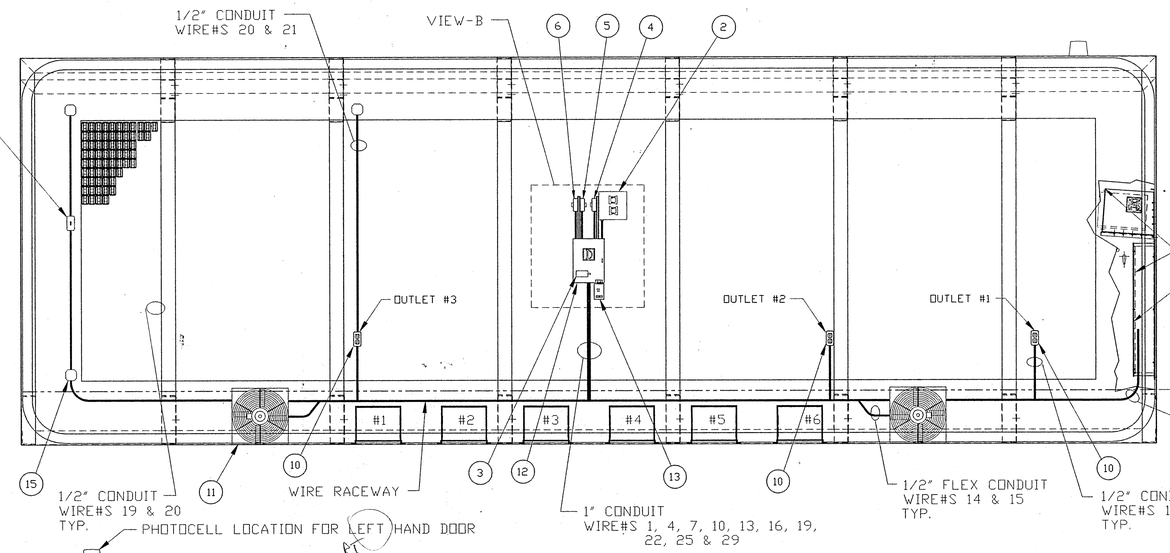

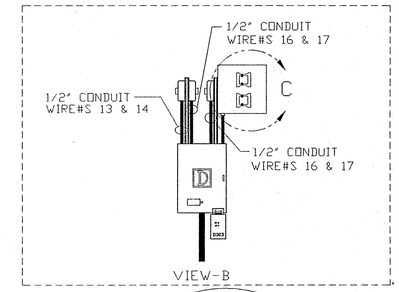

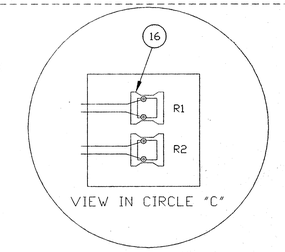

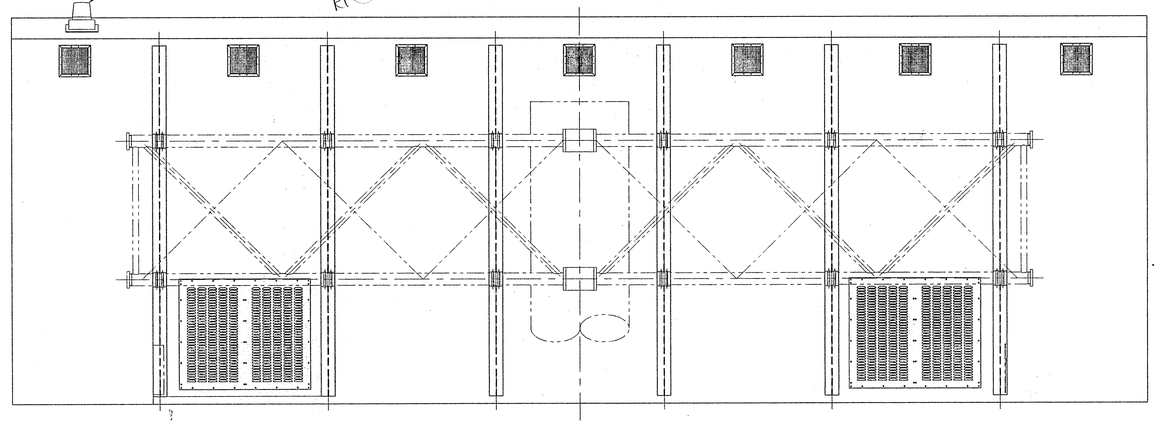

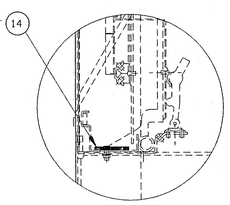

VIEW A
1/4 SCALE

PART	VULTRON NUMBER	QTY.
1/2" CONDUIT	SP1769	30 FT
1/2" CONDUIT COUPLING	SP1767	8
1/2" FLEX CONDUIT	SP1711	40 FT
1/2" FLEX CONDUIT COUPLING	SP1708	2
1" CONDUIT	SP1776	3 FT
1" CONDUIT COUPLING	SP1779	2

STATE OF MONTANA
IFB NO. IFB00-042P
VARIABLE MESSAGE SIGNS

THIS PRINT IS THE PROPERTY OF VULTRON INC. AND IS LOANED IN CONFIDENCE SUBJECT TO RETURN UPON REQUEST AND WITH THE UNDERSTANDING THAT NO COPIES SHALL BE MADE WITHOUT THIS COMPANY'S WRITTEN CONSENT. ALL RIGHTS TO DESIGN OR INVENTION ARE RESERVED.

UNLESS OTHERWISE SPECIFIED DIMENSIONS ARE IN INCHES, TOLERANCES ARE ON ANGLES ± 1/2°
2 PLACES ± .010 3 PLACES ± .005
BREAK ALL SHARP EDGES APPROX ± .010
REMOVE ALL BURRS

FINISH	SEE NOTES
MATERIAL	SEE NOTES
PART NO.	C612-H02

VULTRON INCORPORATED — DIGI-DOT

SCALE	1/18
DRAWN	JEFF CHAMBERLIN
CHECKED	
ENGINEER	GEORGE LEAF
DATE	07/06/2000
SHEET NO. OF	

TITLE: 28 X 144 FULL MATRIX L.E.D. DOT PARTS PLACEMENT (L. H. DOOR)

SIZE	DRAWING NO.	REV.
D	C612-H02	

REV.	DESCRIPTION	DATE	BY

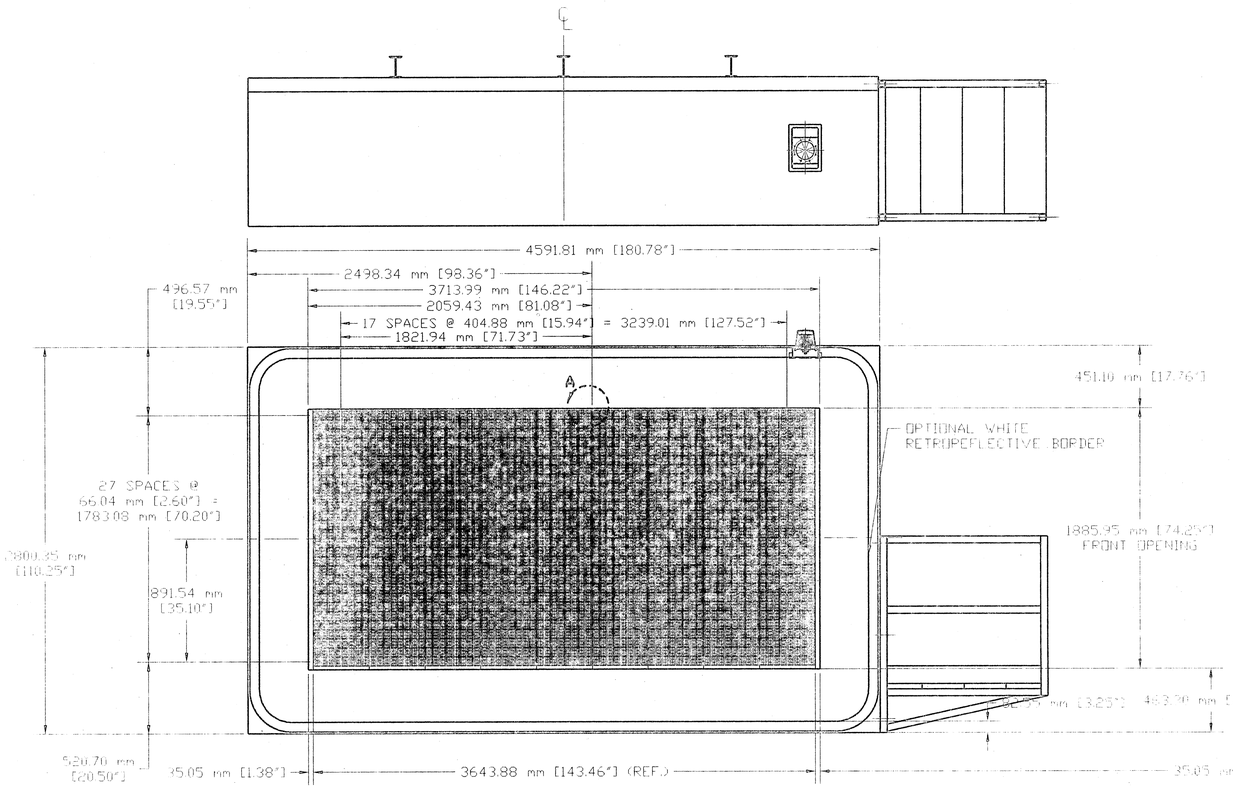

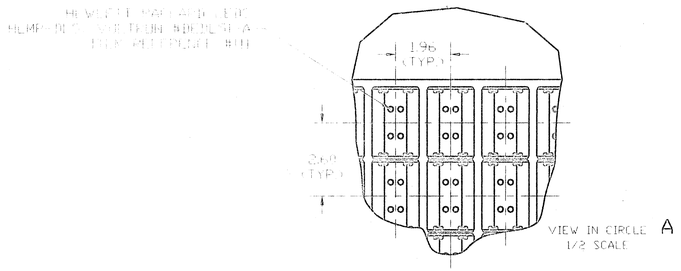

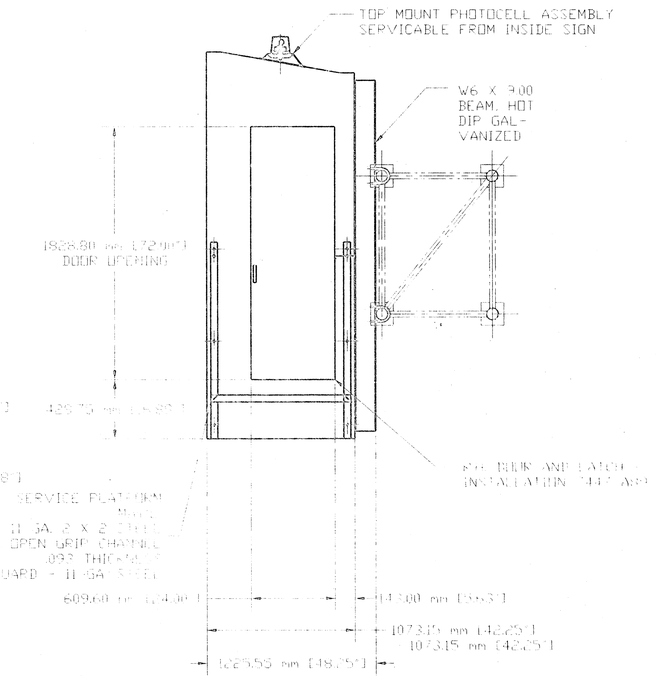

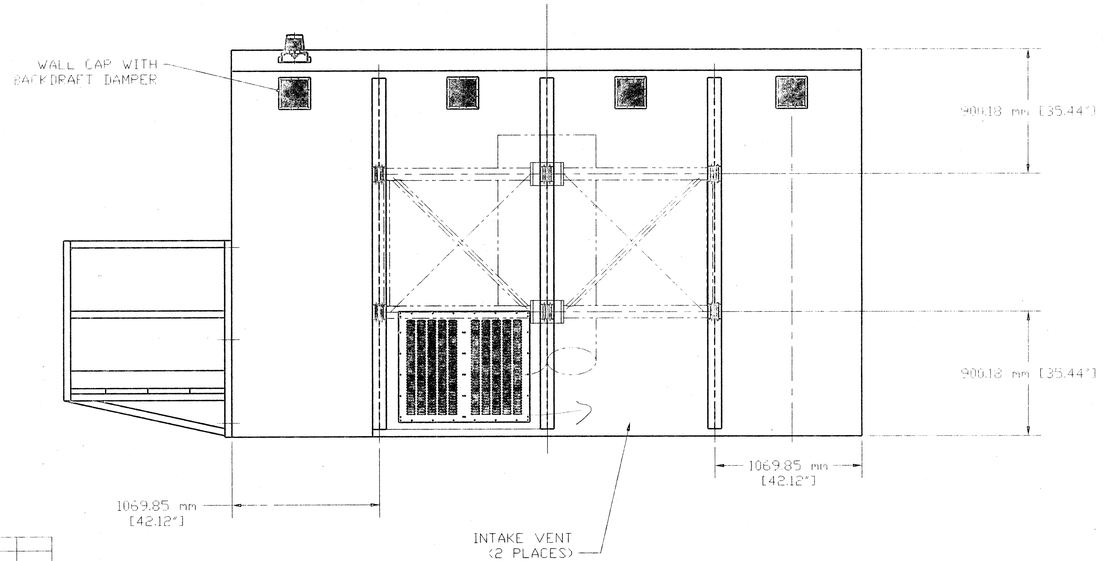

REAR ELEVATION - FOR C.M.S. INSTALLATION

STATE OF MONTANA
IFB NO. :IFB00-042P
VARIABLE MESSAGE SIGNS

REV.	DESCRIPTION	DATE	BY

THIS PRINT IS THE PROPERTY OF VULTRON INC. AND IS LOANED IN CONFIDENCE SUBJECT TO RETURN UPON REQUEST AND WITH THE UNDERSTANDING THAT NO COPIES, TRACINGS MADE WITHOUT THIS COMPANY'S WRITTEN CONSENT, OR ANY RIGHTS TO DESIGN OR INVENTION ARE RESERVED.

UNLESS OTHERWISE SPECIFIED DIMENSIONS ARE IN INCHES. TOLERANCES ON DIM ARE 2 PLACES ± .010 3 PLACES ± .005 ANGLES ±2°
BREAK ALL SHARP EDGES APPROX ± .010 REMOVE ALL BURRS

FINISH	SEE NOTES
MATERIAL	SEE NOTES
PART NO.	C612-K01

VULTRON
DESIGNATED 00GT-101

SCALE	1/18
DRAWN	JEFF CHAMBERLIN
CHECKED	
ENGINEER	M.W.F.
DATE	07/06/2000
SHEET NO.	1F

NAME: 28 X 72 FULL MATRIX L.E.D. DOT R.H. DOOR WALK-IN

SIZE	DRAWING NO.	REV.
D	C612-K01	

VULTRON INC. 2600 BOND ST., ROCHESTER HILLS, MI 48309 (248) 853-2200

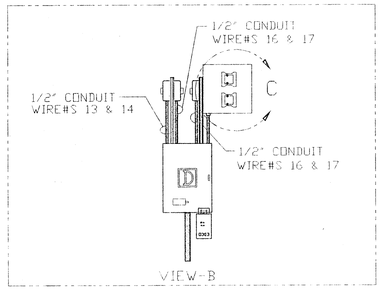

LOOKING THROUGH ROOF OF SIGN

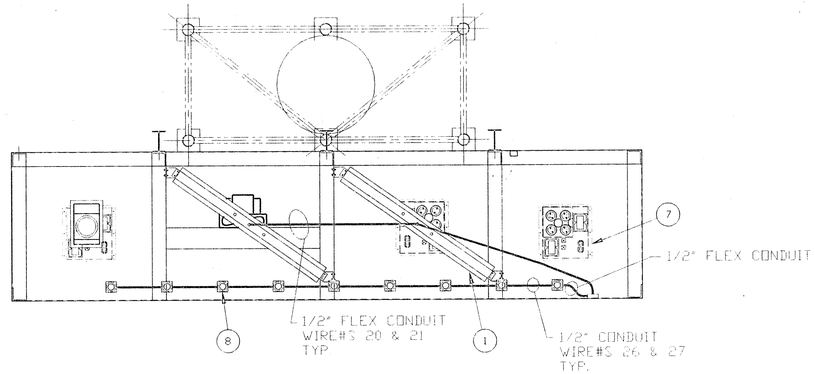

DET #	DESCRIPTION	QTY	VULTRON PART#	SUPPLIER	SUPPLIER OR ASS'Y PART#	ITEM REF. #
16	GENERAL PURPOSE RELAY 120VAC	2	SW1570		CDC PR3PA	119
15	OCTAGON GANG BOX	2	EC2753			
14	HEAT TAPE	12FT	HEATER 12	MINI-TEP CARP	55359-2	125
13	EDCO SURGE PROTECTOR	1	EC2868	EDCO	EMC-240B	
12	SQUARE-D LOAD CENTER 100 AMP MAIN BREAKER	1	9633-A16	SQUARE-D	QO120M100	109
11	SUB FLOOR CIRCULATION FAN	2	FAN-40	GRAINGER	5C530	102
10	GFI OUTLET	5	EC2726	HUBBELL	GF15362I	103
9	LIGHT SWITCH	1	EC2727	GRAINGER	5Z778	124
8	3" FAN	18	FAN-5	GLOBE MOTORS	A31-B15A-15T3-000	121
7	POWER SUPPLY BOX WITH TWO TRANSFORMERS	6	A700-A05			
6	HOT THERMOSTAT	1	SW1530	GRAINGER	2E158	125
5	HUMIDISTAT	1	SW1544	GRAINGER	2E574	123
4	COLD THERMOSTAT	1	SW1510	GRAINGER	4E036	136
3	LIGHTNING ARRESTOR	1	EC2773	DELTA	LA302	106
2	HOFFMAN BOX	1	EC2900		A-SE8X8X4N	105
1	FLOURESCENT LIGHT	4	LT2050		LB-240-120-CW20	104

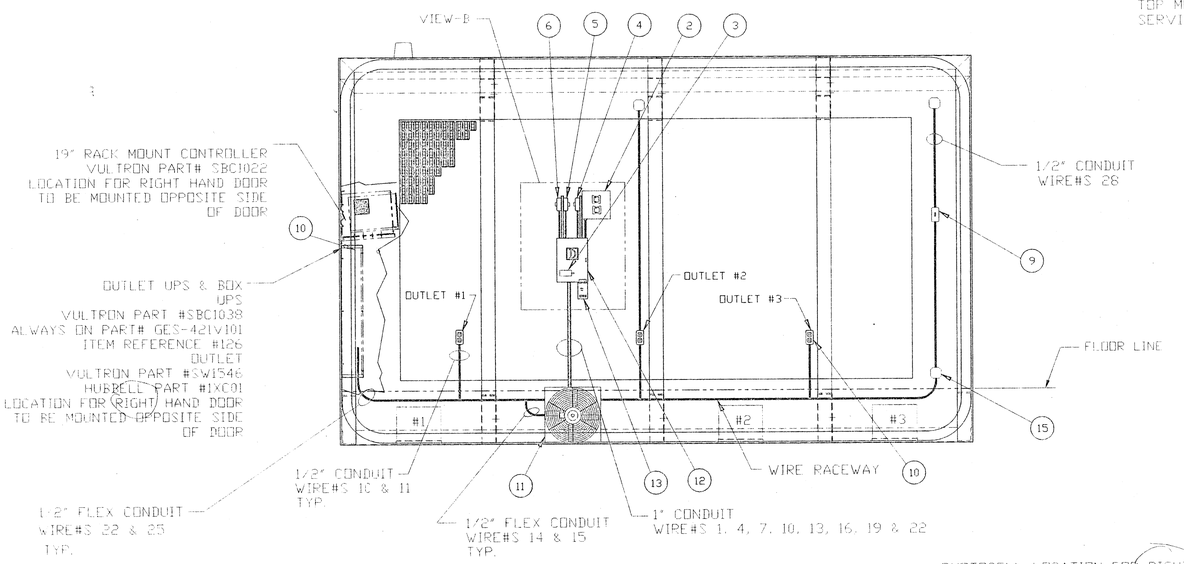

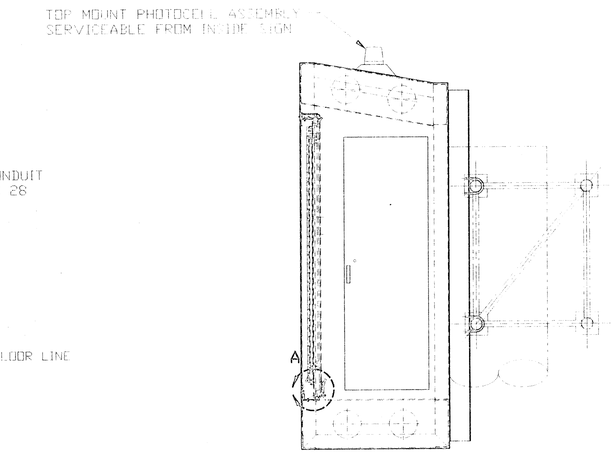

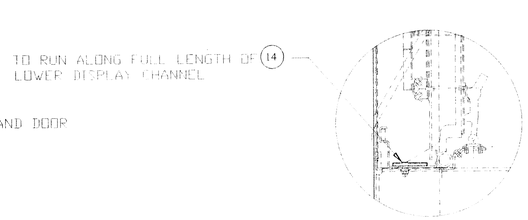

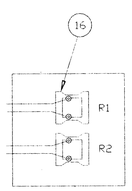

VIEW IN CIRCLE "C"

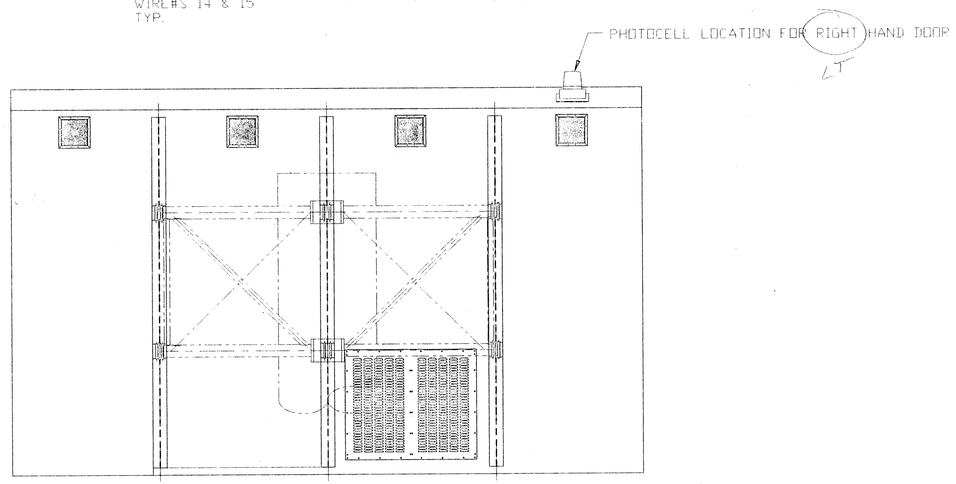

PART	VULTRON NUMBER	QTY.
1/2" CONDUIT	SP1769	30 FT
1/2" CONDUIT COUPLING	SP1767	5
1/2" FLEX CONDUIT	SP1711	4 FT
1/2" FLEX CONDUIT COUPLING	SP1708	2
1" CONDUIT	SP1776	3 FT
1" CONDUIT COUPLING	SP1779	2

STATE OF MONTANA
IFB NO. :IFB00-042P
VARIABLE MESSAGE SIGNS

THIS DRAWING IS THE PROPERTY OF VULTRON INC. AND IS LOANED IN CONFIDENCE TO BE USED EXCLUSIVELY WITH VULTRON INC. THE INFORMATION CONTAINED HEREIN MAY NOT BE COPIED, REPRODUCED OR DISCLOSED WITHOUT WRITTEN CONSENT. ALL RIGHTS TO THE DESIGN OF INVENTION ARE RESERVED.
UNLESS OTHERWISE SPECIFIED DIMENSIONS ARE IN INCHES. TOLERANCES ON FOR ARE:
DECIMALS ± .010 ANGLES ± 1/2°
FRACTIONS ± 1/64 REMOVE ALL BURR
FINISH: SEE SPECS
MATERIAL: SEE SPECS

VULTRON
DIGI-DOT
DATE: 1/13
DRAWN: JEFF CHAMBERLIN
CHECKED:
DRAFTED: GEORGE LEAR
DATE: 07/08/2000
SHEET NO. 1 OF 1
SIZE: D
DRAWING NO. 2612-H02
REV.
SIZE: 39 X 72
FOLD MATRIX
LED 003
PARTS PLACEMENT
IF NO. 0100

REV.	DESCRIPTION	DATE	BY

VULTRON INC., 2800 BOND ST., ROCHESTER HILLS, MI 48309, (248) 853-2200

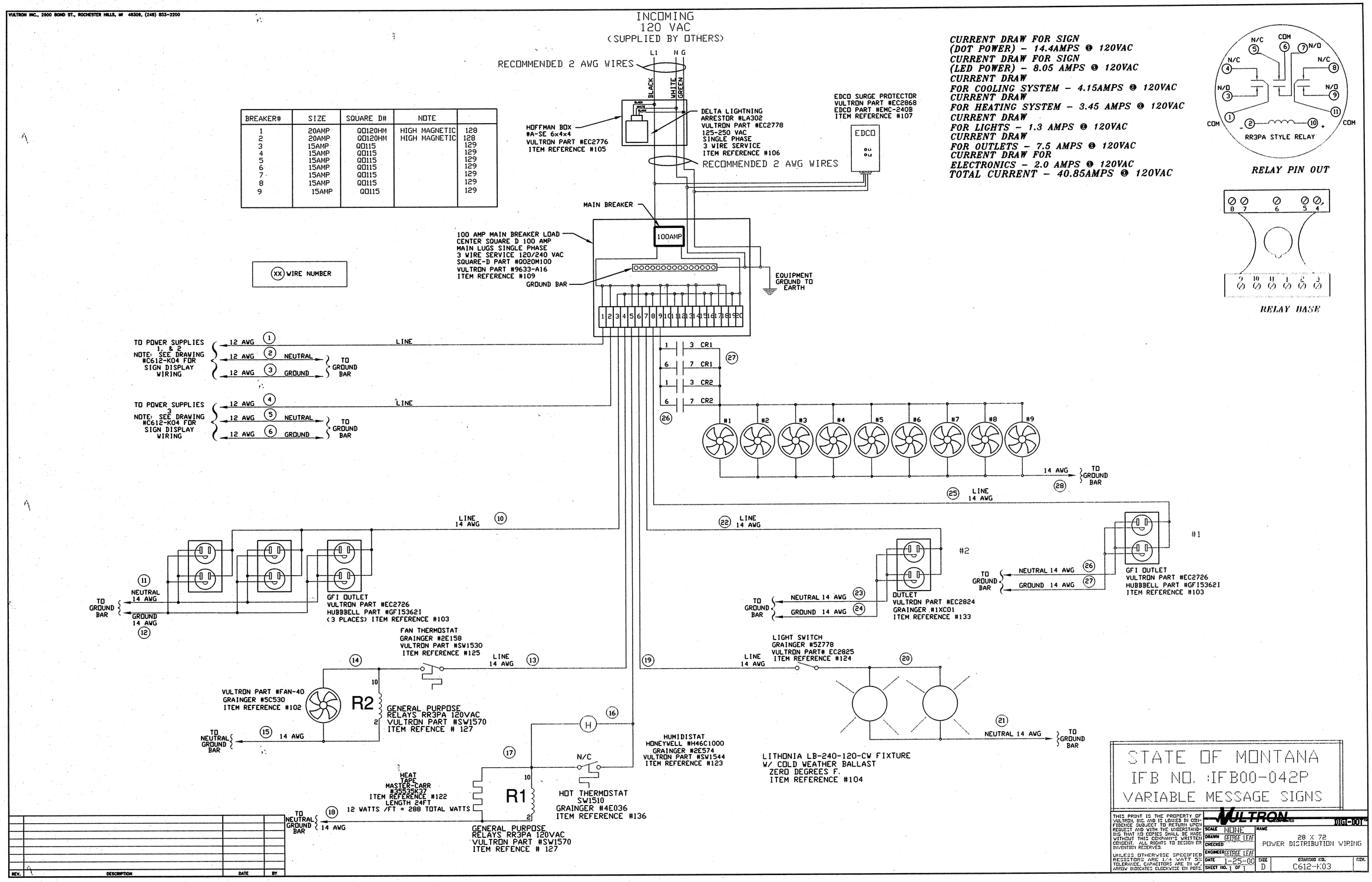

VULTRON INC., 2900 BOND ST., ROCHESTER HILLS, MI 48309, (248) 833-2200

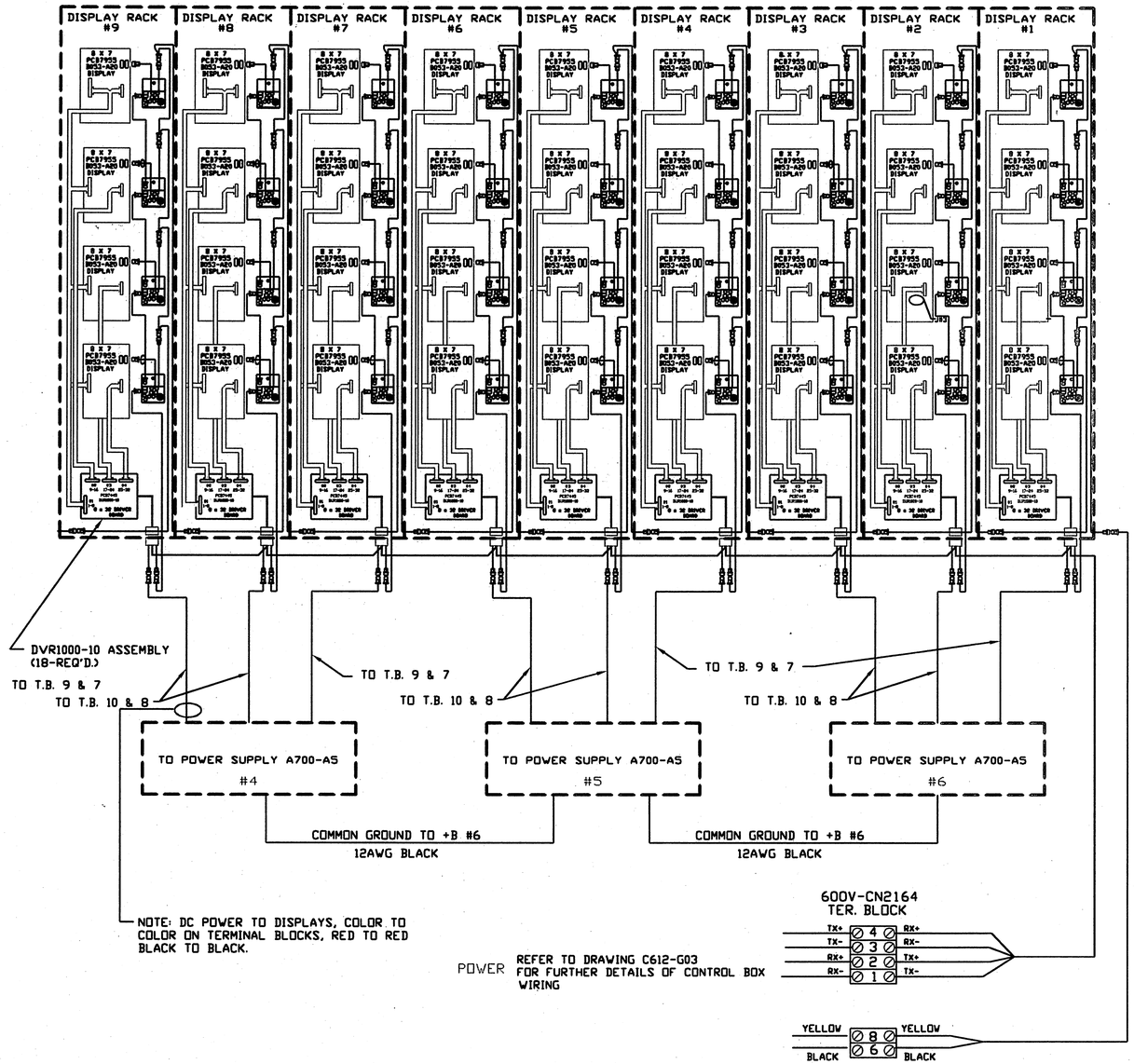

NOTE:
FOR SIGN PARTS PLACEMENT SEE DRAWING C612-K02

NOTE:
FOR CONTROL PANEL WIRING SEE DRAWING C612-G03

NOTE:
FOR POWER DISTRIBUTION SEE DRAWING C612-K03

REV.	DESCRIPTION	DATE	BY

STATE OF MONTANA
IFB NO. :IFB00-042P
VARIABLE MESSAGE SIGNS

THIS PRINT IS THE PROPERTY OF VULTRON, INC AND IS LOANED IN CONFIDENCE SUBJECT TO RETURN UPON REQUEST AND WITH THE UNDERSTANDING THAT NO COPIES SHALL BE MADE WITHOUT THIS COMPANY'S WRITTEN CONSENT. ALL RIGHTS TO DESIGN OR INVENTION RESERVED.

UNLESS OTHERWISE SPECIFIED RESISTORS ARE 1/4 WATT 5% TOLERANCE. CAPACITORS ARE IN uF. ARROW INDICATES CLOCKWISE ON POTS.

VULTRON DIGI-DOT

SCALE	NONE
DRAWN	GEORGE LEAF
CHECKED	
ENGINEER	GEORGE LEAF
DATE	10-18-99
SHEET NO.	1 OF 1

NAME: 28 ROWS X 72 COLUMNS DISPLAY TO DRIVER WIRING DIAGRAM PROPOSAL

SIZE: D

DRAWING NO.: C612-K04

REV.

VULTRON INC. 2600 BOND ST., ROCHESTER HILLS, MI 48309, (248) 853-2200

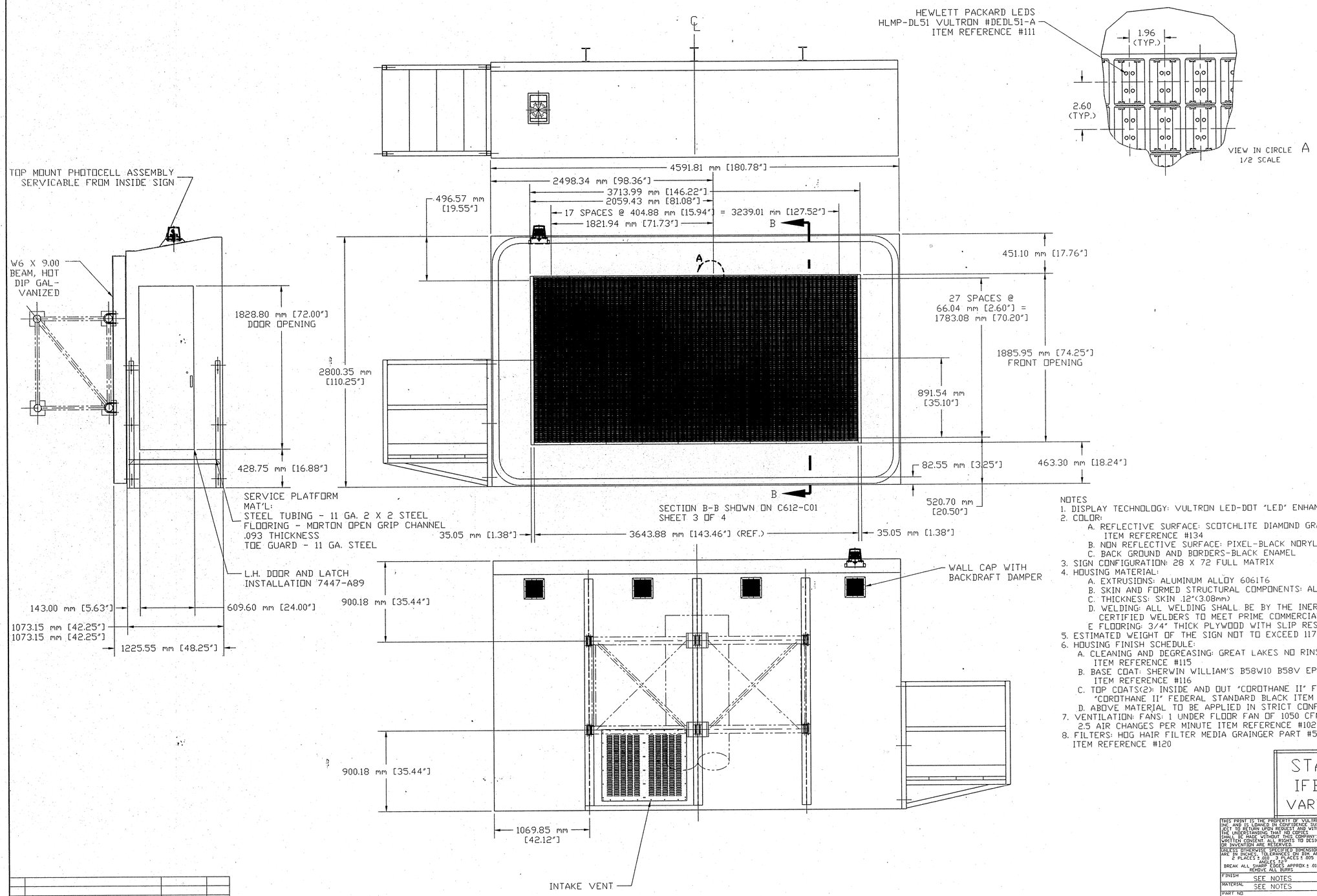

NOTES
1. DISPLAY TECHNOLOGY: VULTRON LED-DOT "LED" ENHANCED REFLECTIVE DISC.
2. COLOR:
   A. REFLECTIVE SURFACE: SCOTCHLITE DIAMOND GRADE REFLECTIVE SHEETING (YELLOW) ITEM REFERENCE #134
   B. NON REFLECTIVE SURFACE: PIXEL-BLACK NORYL
   C. BACK GROUND AND BORDERS-BLACK ENAMEL
3. SIGN CONFIGURATION: 28 X 72 FULL MATRIX
4. HOUSING MATERIAL:
   A. EXTRUSIONS: ALUMINUM ALLOY 6061T6
   B. SKIN AND FORMED STRUCTURAL COMPONENTS: ALUMINUM ALLOY, 5052-H32
   C. THICKNESS: SKIN .12"(3.08mm)
   D. WELDING: ALL WELDING SHALL BE BY THE INERT GAS PROCESS, AND PERFORMED BY CERTIFIED WELDERS TO MEET PRIME COMMERCIAL STANDARDS FOR STRUCTURES.
   E FLOORING: 3/4" THICK PLYWOOD WITH SLIP RESISTANT COATING
5. ESTIMATED WEIGHT OF THE SIGN NOT TO EXCEED 1179.34 kG (2600 LBS)
6. HOUSING FINISH SCHEDULE:
   A. CLEANING AND DEGREASING: GREAT LAKES NO RINSE PRE PAINT CLEANER PRETREATMENT ITEM REFERENCE #115
   B. BASE COAT: SHERWIN WILLIAM'S B58W10 B58V EPOXY MASTIC COATING INSIDE AND OUT ITEM REFERENCE #116
   C. TOP COATS(2): INSIDE AND OUT "CORDTHANE II" FEDERAL STANDARD GRAY FRONT FACE: "CORDTHANE II" FEDERAL STANDARD BLACK ITEM REFERENCE #112
   D. ABOVE MATERIAL TO BE APPLIED IN STRICT CONFORMANCE TO MANUFACTURE PROCEDURES
7. VENTILATION: FANS: 1 UNDER FLOOR FAN OF 1050 CFM WHICH PROVIDE A MINIMUM OF 2.5 AIR CHANGES PER MINUTE ITEM REFERENCE #102
8. FILTERS: HOG HAIR FILTER MEDIA GRAINGER PART #5C432 VULTRON PART # FAN-53 ITEM REFERENCE #120

STATE OF MONTANA
IFB NO. :IFB00-042P
VARIABLE MESSAGE SIGNS

REV.	DESCRIPTION	DATE	BY

THIS PRINT IS THE PROPERTY OF VULTRON INC AND IS LOANED IN CONFIDENCE SUBJECT TO RETURN UPON REQUEST AND WITH THE UNDERSTANDING THAT NO COPIES SHALL BE MADE WITHOUT THIS COMPANY'S WRITTEN CONSENT. ALL RIGHTS TO DESIGN OR INVENTION ARE RESERVED.

UNLESS OTHERWISE SPECIFIED DIMENSIONS ARE IN INCHES. TOLERANCES ON DIM. ARE 2 PLACES ± .010 3 PLACES ± .005 ANGLES ± 1°
BREAK ALL SHARP EDGES APPROX ± .010 REMOVE ALL BURRS

FINISH	SEE NOTES
MATERIAL	SEE NOTES
PART NO.	C612-L01

VULTRON INCORPORATED — DIGI-DOT

SCALE	1/18
DRAWN	JEFF CHAMBERLIN
CHECKED	
ENGINEER	M.W.F.
DATE	01/25/2000
SHEET NO.	OF

NAME: 28 X 72 FULL MATRIX L.E.D. DOT L.H. DOOR WALK-IN

SIZE	DRAWING NO	REV.
D	C612-L01	

VULTRON INC., 2600 BOND ST., ROCHESTER HILLS, MI 48309 (248) 853-2200

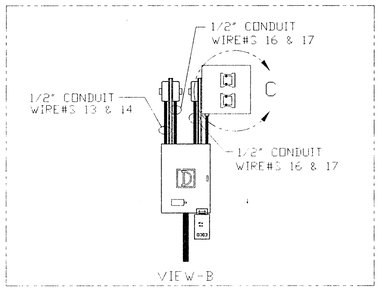

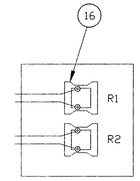

VIEW IN CIRCLE "C"

LOOKING THROUGH ROOF OF SIGN

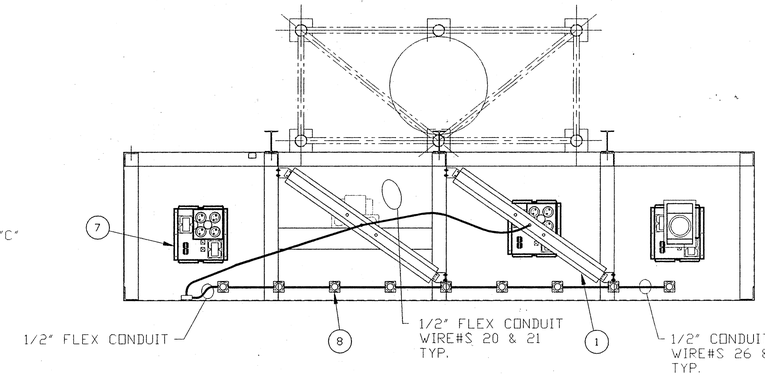

DET #	DESCRIPTION	QTY	VULTRON PART#	SUPPLIER	SUPPLIER OR ASS'Y PART#	ITEM REF. #
16	GENERAL PURPOSE RELAY 120VAC	2	SW1570		CDS RR3PA	113
15	OCTAGON GANG BOX	3	EC2783			
14	HEAT TAPE	12FT	HEATER-13	MCMASTER CARR	35535K37	122
13	EDCO SURGE PROTECTOR	1	EC2868	EDCO	EMC-240B	
12	SQUARE-D LOAD CENTER 100 AMP MAIN BREAKER	1	9633-A16	SQUARE-D	QO120M100	109
11	SUB FLOOR CIRCULATION FAN	2	FAN-40	GRAINGER	5C530	102
10	GFI OUTLET	5	EC2726	HUBBELL	GF153621	103
9	LIGHT SWITCH	1	EC2727	GRAINGER	5Z778	124
8	3" FAN	18	FAN-5	GLOBE MOTORS	A31-B15A-15T3-000	121
7	POWER SUPPLY BOX WITH TWO TRANSFORMERS	6	A700-A05			
6	HOT THERMOSTAT	1	SW1530	GRAINGER	2E158	125
5	HUMIDISTAT	1	SW1544	GRAINGER	2E574	123
4	COLD THERMOSTAT	1	SW1510	GRAINGER	4E036	136
3	LIGHTNING ARRESTOR	1	EC2778	DELTA	LA302	106
2	HOFFMAN BOX	1	EC2907		A-SE8X8X4NK	105
1	FLOURESCENT LIGHT	4	LT2060		LB-240-120-CW20	104

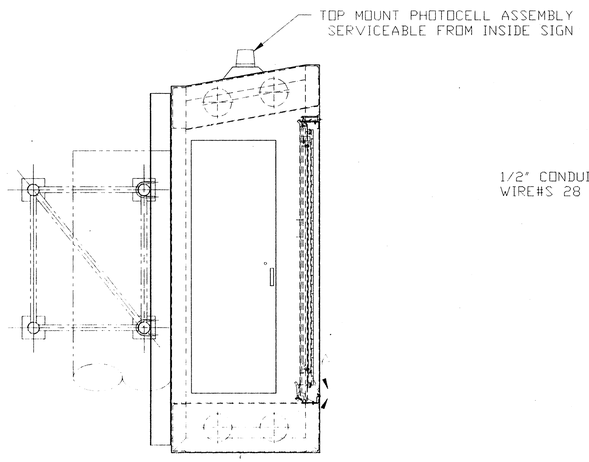

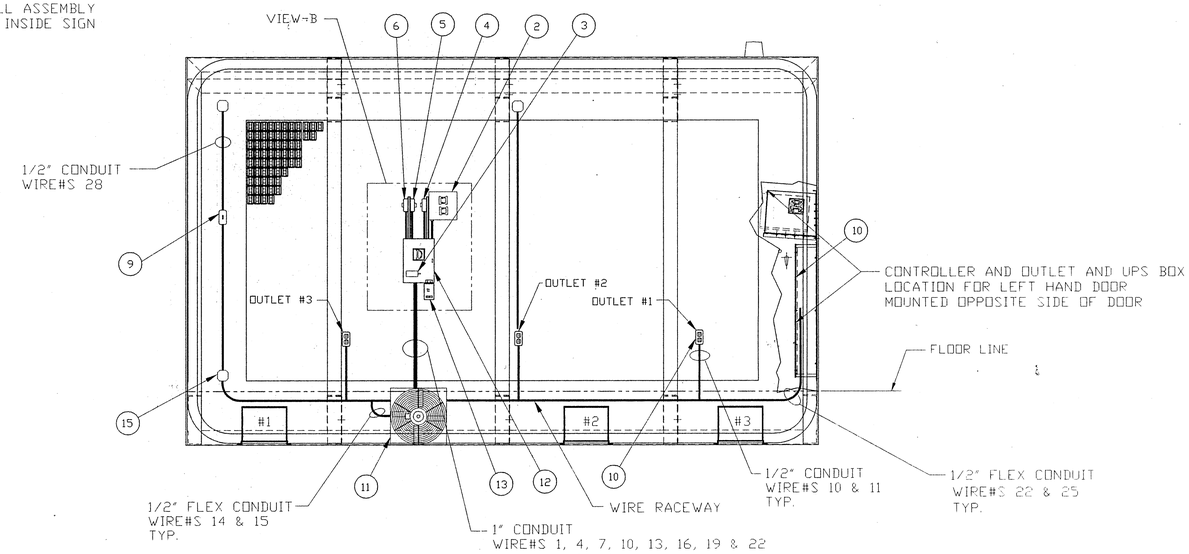

QTY.	VULTRON NUMBER	PART
30 FT	SP1769	1/2" CONDUIT
5	SP1767	1/2" CONDUIT COUPLING
4 FT	SP1711	1/2" FLEX CONDUIT
2	SP1708	1/2" FLEX CONDUIT COUPLING
3 FT	SP1776	1" CONDUIT
2	SP1779	1" CONDUIT COUPLING

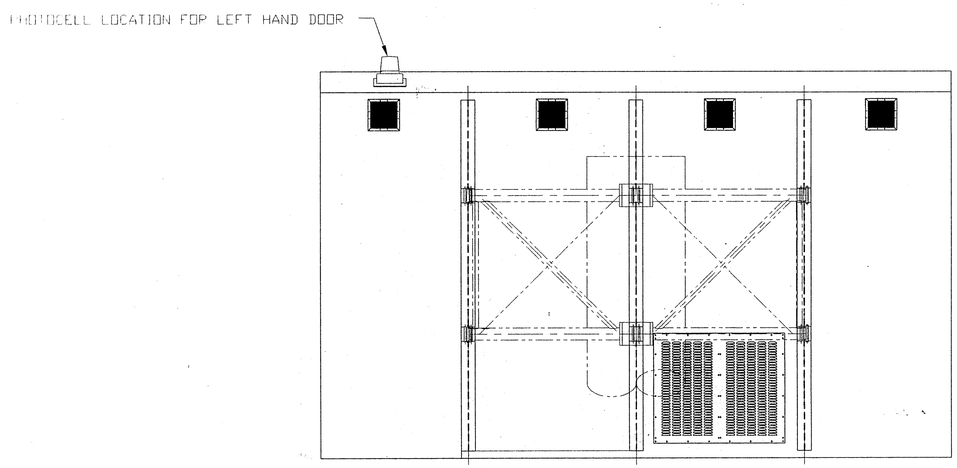

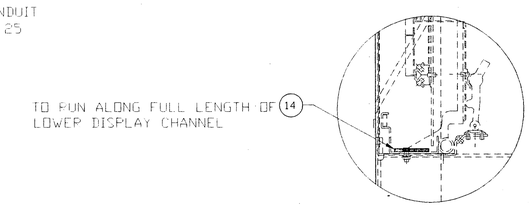

VIEW A
1/4 SCALE

STATE OF MONTANA
IFB NO. IFB00-042P
VARIABLE MESSAGE SIGNS

REV.	DESCRIPTION	DATE	BY

THIS PRINT IS THE PROPERTY OF VULTRON INC. AND IS LOANED IN CONFIDENCE SUBJECT UNDER RETURN UPON REQUEST AND WITH THE UNDERSTANDING THAT NO COPY SHALL BE MADE WITHOUT THIS COMPANY'S WRITTEN CONSENT. ALL RIGHTS TO DESIGN OR INVENTION ARE RESERVED.

UNLESS OTHERWISE SPECIFIED DIMENSIONS ARE IN INCHES. TOLERANCES ON DIM. ARE: 2 PLACES ± .050 3 PLACES ± .005 ANGLES ±2°
BREAK ALL SHARP EDGES APPROX ± .010
REMOVE ALL BURRS

FINISH: SEE NOTES
MATERIAL: SEE NOTES
PART NO.: C612-L02

VULTRON INCORPORATED — DIGI-DOT

SCALE: 1/18
DRAWN: JEFF CHAMBERLIN
CHECKED:
ENGINEER: GEORGE LEAF
DATE: 07/06/2000
SHEET NO. OF

NAME: 28 X 72 FULL MATRIX L.E.D. DOT PARTS PLACEMENT (L. H.) DOOR

SIZE: D
DRAWING NO.: C612-L02
REV.