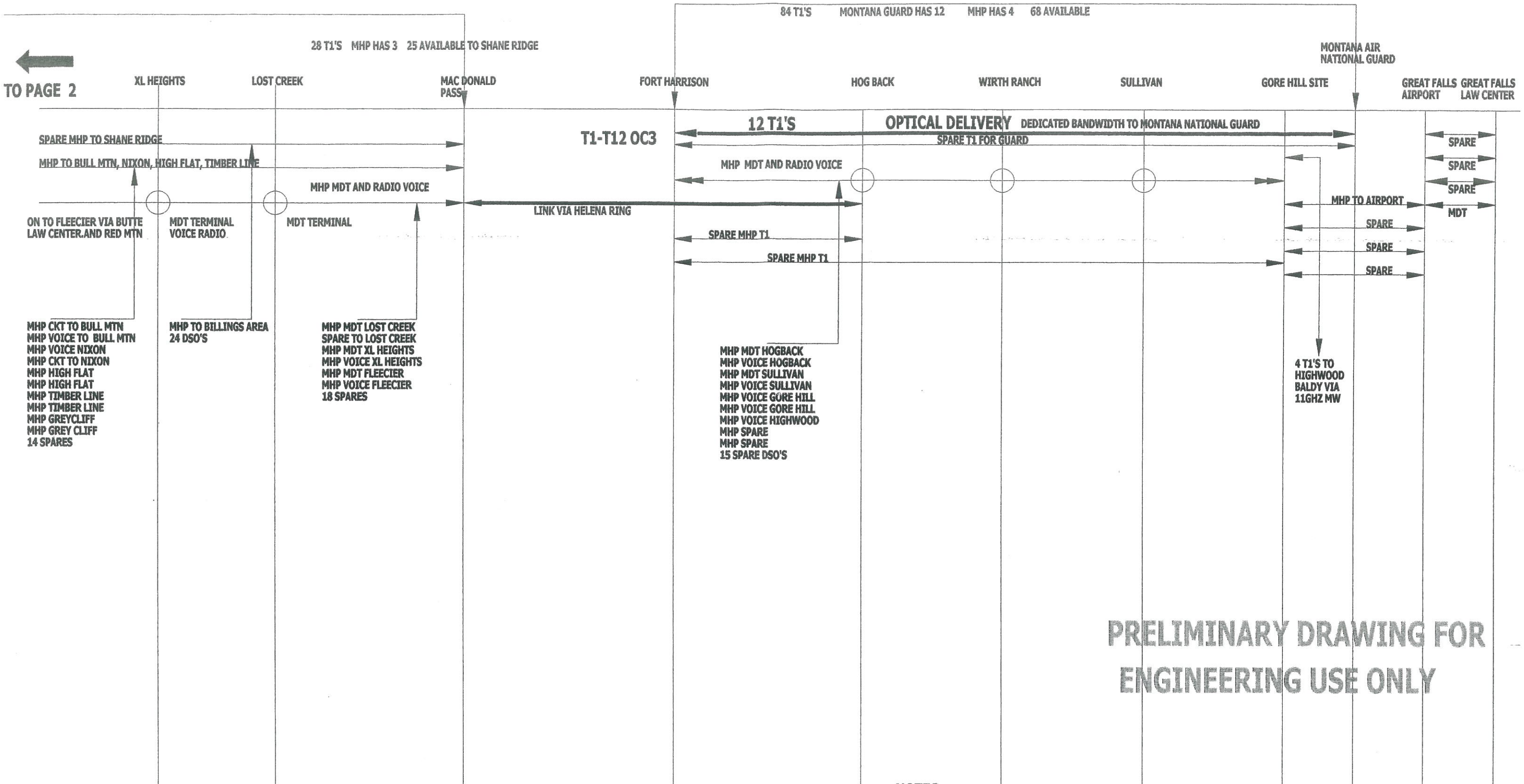

PRELIMINARY DRAWING FOR ENGINEERING USE ONLY

NOTES:

⊕ DROP AND INSERT T1

Dunne COMMUNICATIONS INC.

BASE BAND PLAN #1

MHP/DOT/MNG MICROWAVE

DATE	DRAWN	SCALE	CHKD	
4-10-06	P.DUNNE	NONE		2042B

PROJECT

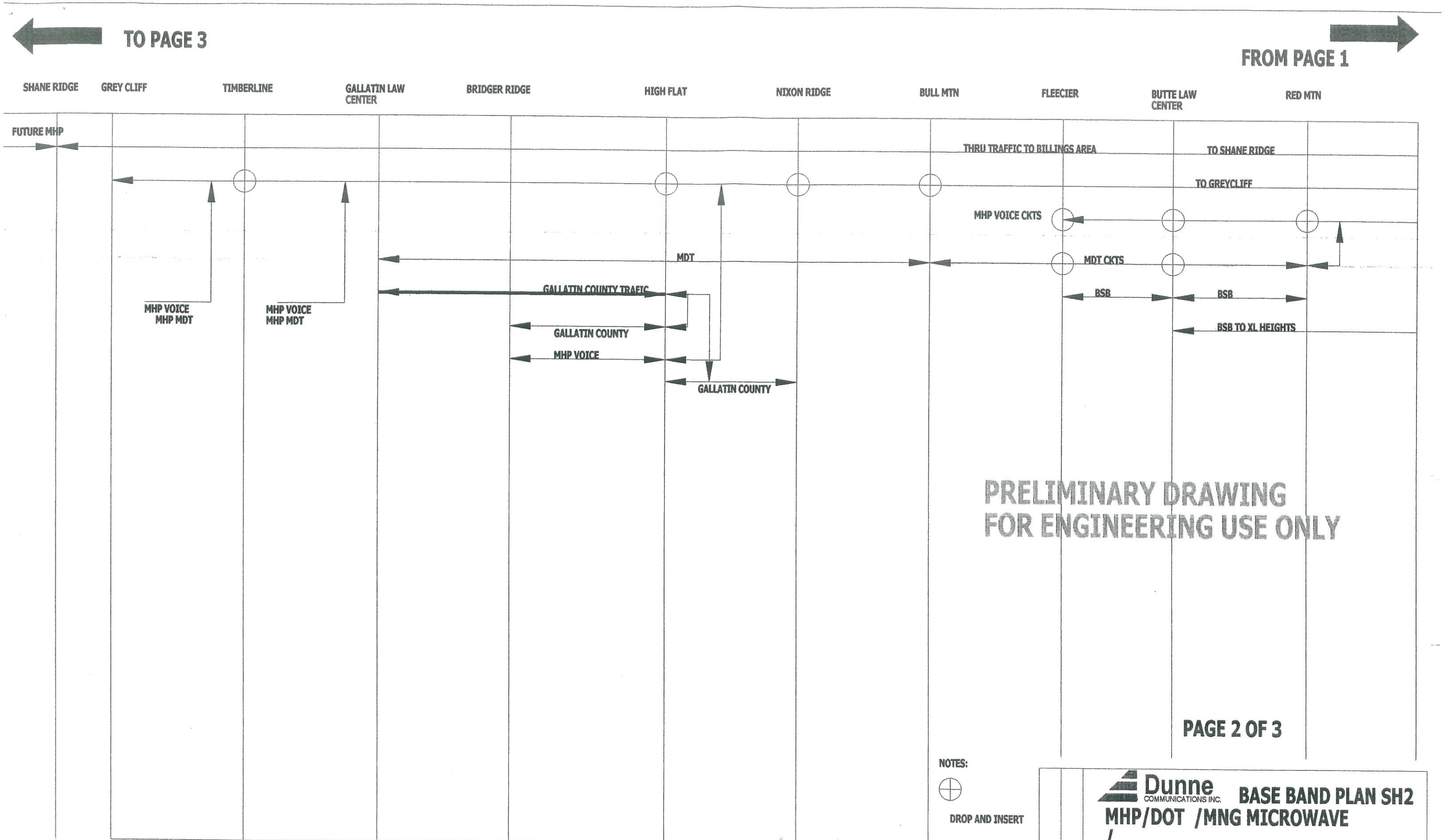
TO PAGE 3
FROM PAGE 1
SHANE RIDGE
GREY CLIFF
TIMBERLINE
GALLATIN LAW CENTER
BRIDGER RIDGE
HIGH FLAT
NIXON RIDGE
BULL MTN
FLEECIER
BUTTE LAW CENTER
RED MTN
FUTURE MHP
THRU TRAFFIC TO BILLINGS AREA
TO SHANE RIDGE
TO GREYCLIFF
MHP VOICE CKTS
MDT
MDT CKTS
GALLATIN COUNTY TRAFIC
BSB
BSB
MHP VOICE
MHP MDT
MHP VOICE
MHP MDT
GALLATIN COUNTY
BSB TO XL HEIGHTS
MHP VOICE
GALLATIN COUNTY
PRELIMINARY DRAWING
FOR ENGINEERING USE ONLY
PAGE 2 OF 3
NOTES:
DROP AND INSERT
Dunne COMMUNICATIONS INC.
BASE BAND PLAN SH2
MHP/DOT /MNG MICROWAVE
DATE 4-10-06
DRAWN P.DUNNE
SCALE NONE
CHKD
2043B
PROJECT

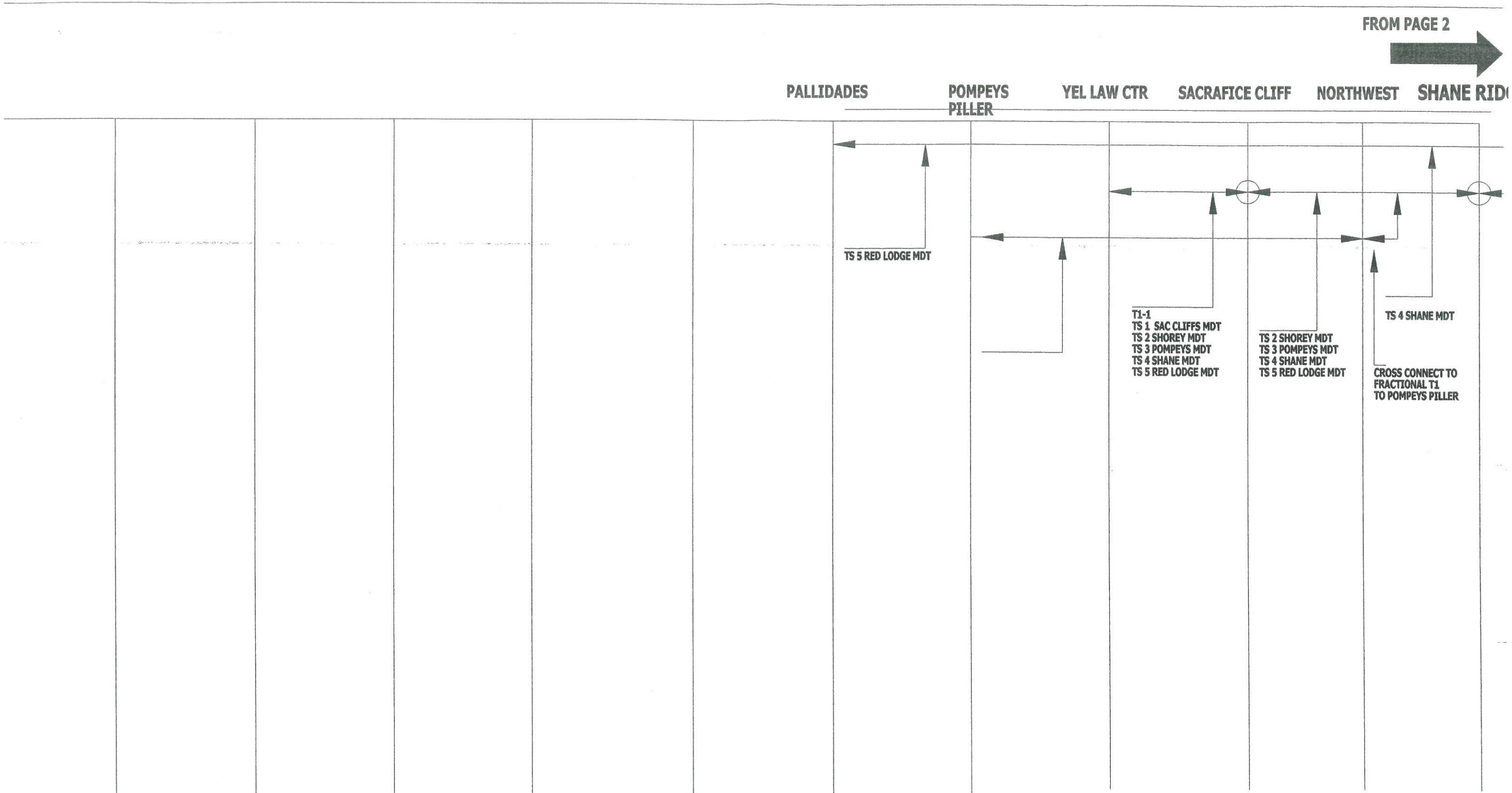

Dunne COMMUNICATIONS INC.

MHP /NG/DOT

CHANNEL PLAN FOR T1 CIRCUITS

PAGE 3

DATE	DRAWN	SCALE	CHKD	
	P.DUNNE	NONE		2044B

PROJECT: MHP--DOT--MONTANA GUARD

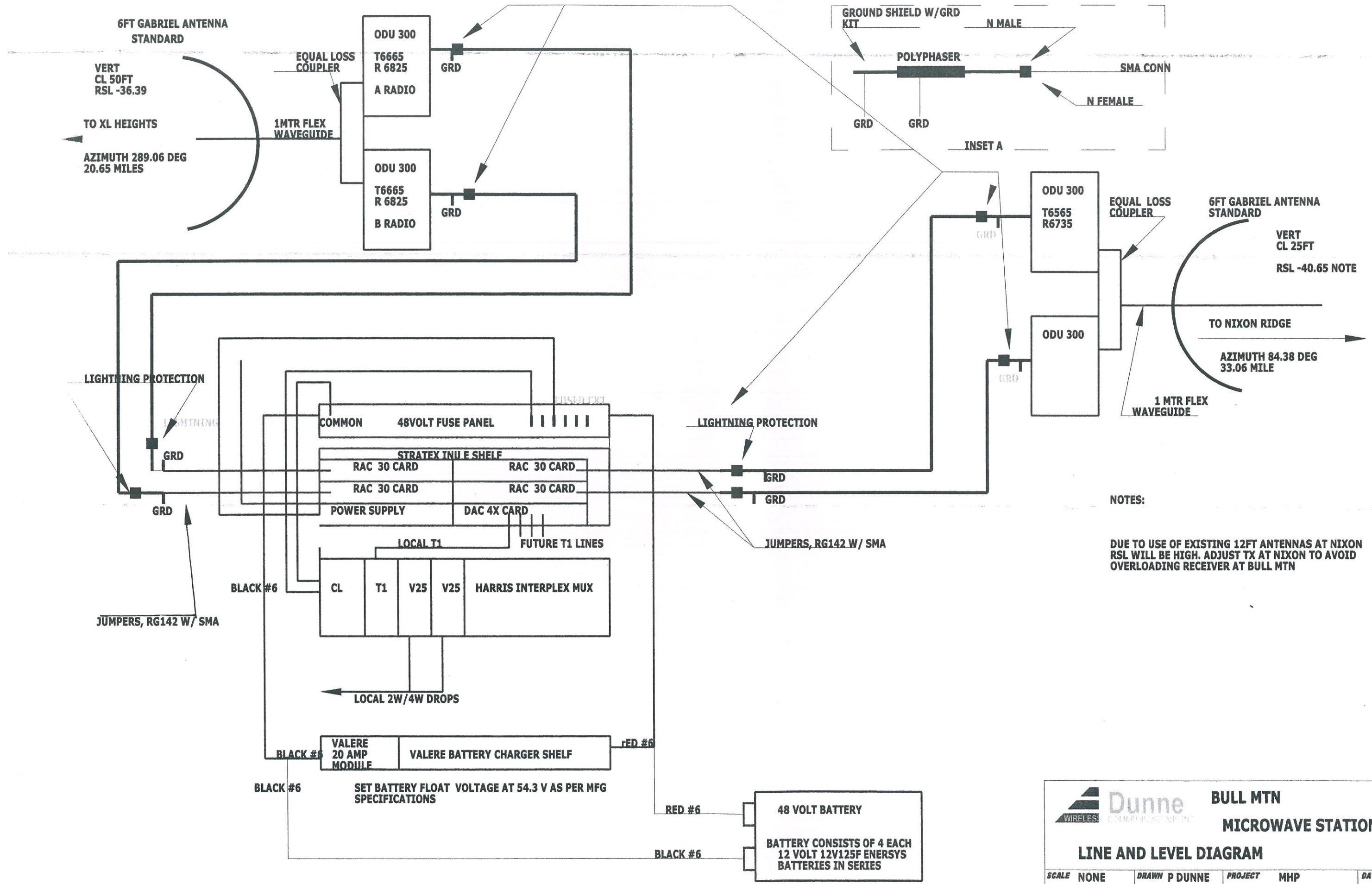

NOTES:

DUE TO USE OF EXISTING 12FT ANTENNAS AT NIXON RSL WILL BE HIGH. ADJUST TX AT NIXON TO AVOID OVERLOADING RECEIVER AT BULL MTN

Dunne WIRELESS COMMUNICATIONS INC

BULL MTN
MICROWAVE STATION

LINE AND LEVEL DIAGRAM

CHECKED B

SCALE	DRAWN	PROJECT	DATE
NONE	P DUNNE	MHP	5-11-06

NUMBER 2226B

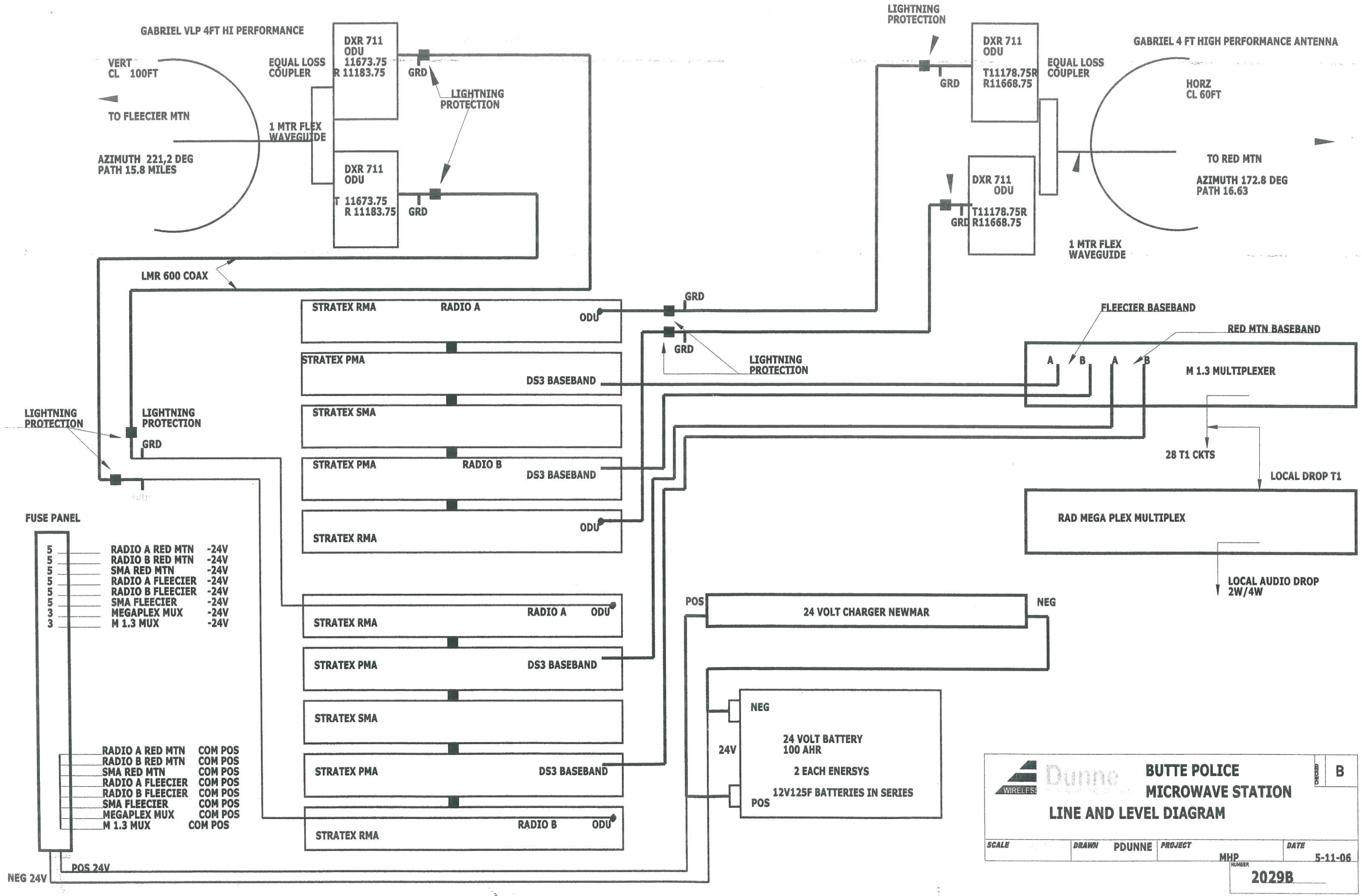
GABRIEL VLP 4FT HI PERFORMANCE
VERT
CL 100FT
TO FLEECIER MTN
AZIMUTH 221,2 DEG
PATH 15.8 MILES
EQUAL LOSS
COUPLER
1 MTR FLEX
WAVEGUIDE
DXR 711
ODU
11673.75
R 11183.75
GRD
LIGHTNING
PROTECTION
DXR 711
ODU
T 11673.75
R 11183.75
GRD
LIGHTNING
PROTECTION
DXR 711
ODU
T11178.75R
R11668.75
GRD
EQUAL LOSS
COUPLER
GABRIEL 4 FT HIGH PERFORMANCE ANTENNA
HORZ
CL 60FT
TO RED MTN
AZIMUTH 172.8 DEG
PATH 16.63
DXR 711
ODU
T11178.75R
R11668.75
GRD
1 MTR FLEX
WAVEGUIDE
LMR 600 COAX
STRATEX RMA
RADIO A
ODU
GRD
GRD
LIGHTNING
PROTECTION
STRATEX PMA
DS3 BASEBAND
STRATEX SMA
STRATEX PMA
RADIO B
DS3 BASEBAND
STRATEX RMA
ODU
FLEECIER BASEBAND
RED MTN BASEBAND
A
B
A
B
M 1.3 MULTIPLEXER
28 T1 CKTS
LOCAL DROP T1
RAD MEGA PLEX MULTIPLEX
LOCAL AUDIO DROP
2W/4W
LIGHTNING
PROTECTION
LIGHTNING
PROTECTION
GRD
FUSE PANEL
5 RADIO A RED MTN -24V
5 RADIO B RED MTN -24V
5 SMA RED MTN -24V
5 RADIO A FLEECIER -24V
5 RADIO B FLEECIER -24V
5 SMA FLEECIER -24V
3 MEGAPLEX MUX -24V
3 M 1.3 MUX -24V
RADIO A RED MTN COM POS
RADIO B RED MTN COM POS
SMA RED MTN COM POS
RADIO A FLEECIER COM POS
RADIO B FLEECIER COM POS
SMA FLEECIER COM POS
MEGAPLEX MUX COM POS
M 1.3 MUX COM POS
NEG 24V
POS 24V
STRATEX RMA
RADIO A
ODU
STRATEX PMA
DS3 BASEBAND
STRATEX SMA
STRATEX PMA
DS3 BASEBAND
STRATEX RMA
RADIO B
ODU
POS
24 VOLT CHARGER NEWMAR
NEG
NEG
24V
24 VOLT BATTERY
100 AHR
2 EACH ENERSYS
12V125F BATTERIES IN SERIES
POS
Dunne
WIRELESS
BUTTE POLICE
MICROWAVE STATION
LINE AND LEVEL DIAGRAM
CHECKED
B
SCALE
DRAWN
PDUNNE
PROJECT
MHP
DATE
5-11-06
NUMBER
2029B

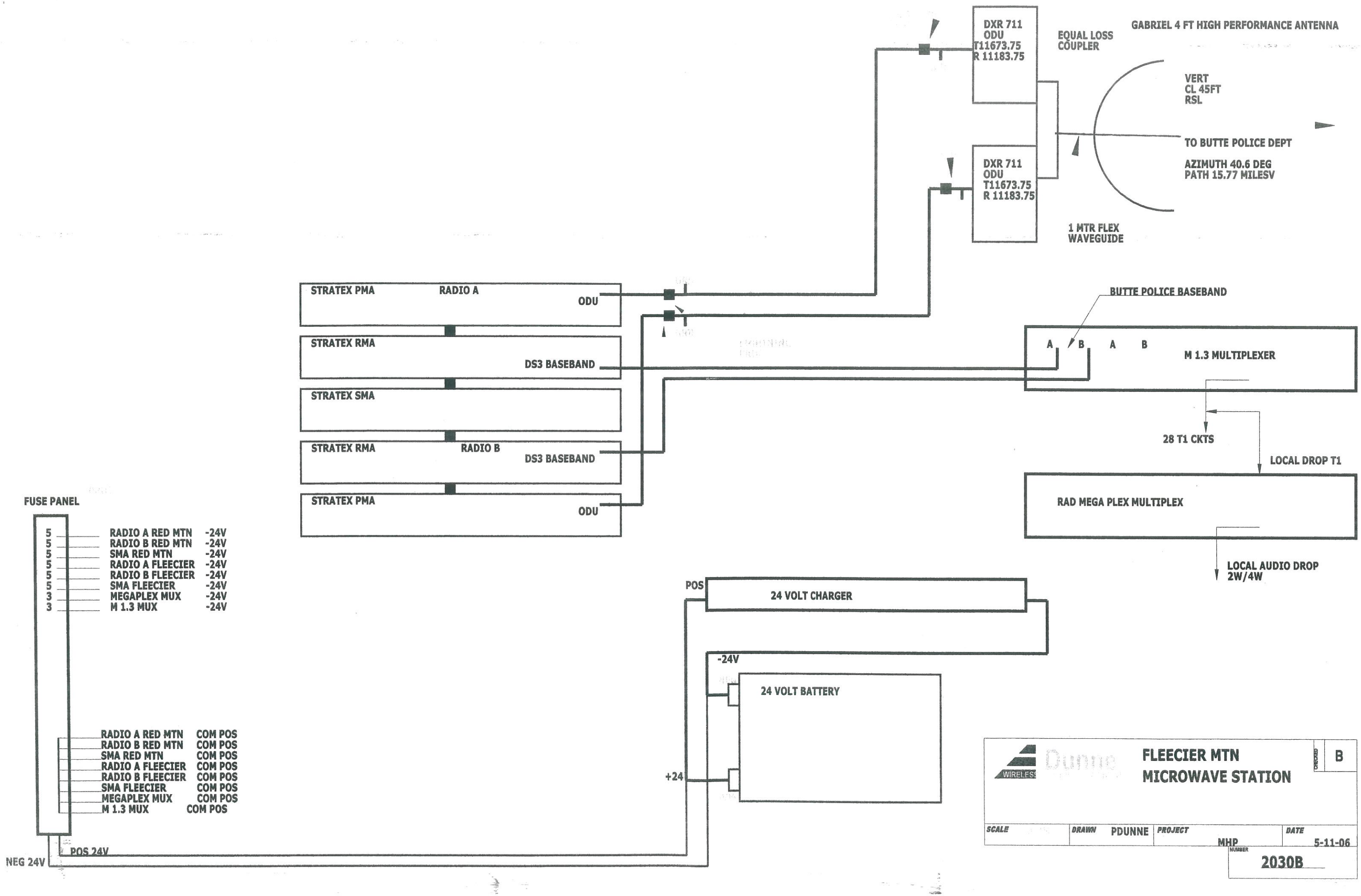
DXR 711
ODU
T11673.75
R 11183.75
DXR 711
ODU
T11673.75
R 11183.75
EQUAL LOSS
COUPLER
GABRIEL 4 FT HIGH PERFORMANCE ANTENNA
VERT
CL 45FT
RSL
TO BUTTE POLICE DEPT
AZIMUTH 40.6 DEG
PATH 15.77 MILESV
1 MTR FLEX
WAVEGUIDE
STRATEX PMA
RADIO A
ODU
STRATEX RMA
DS3 BASEBAND
STRATEX SMA
STRATEX RMA
RADIO B
DS3 BASEBAND
STRATEX PMA
ODU
BUTTE POLICE BASEBAND
A
B
A
B
M 1.3 MULTIPLEXER
28 T1 CKTS
LOCAL DROP T1
RAD MEGA PLEX MULTIPLEX
LOCAL AUDIO DROP
2W/4W
FUSE PANEL
5 RADIO A RED MTN -24V
5 RADIO B RED MTN -24V
5 SMA RED MTN -24V
5 RADIO A FLEECIER -24V
5 RADIO B FLEECIER -24V
5 SMA FLEECIER -24V
3 MEGAPLEX MUX -24V
3 M 1.3 MUX -24V
RADIO A RED MTN COM POS
RADIO B RED MTN COM POS
SMA RED MTN COM POS
RADIO A FLEECIER COM POS
RADIO B FLEECIER COM POS
SMA FLEECIER COM POS
MEGAPLEX MUX COM POS
M 1.3 MUX COM POS
POS 24V
NEG 24V
POS
24 VOLT CHARGER
-24V
24 VOLT BATTERY
+24
WIRELESS
Dunne
FLEECIER MTN
MICROWAVE STATION
CHECKED
B
SCALE
DRAWN
PDUNNE
PROJECT
MHP
DATE
5-11-06
NUMBER
2030B

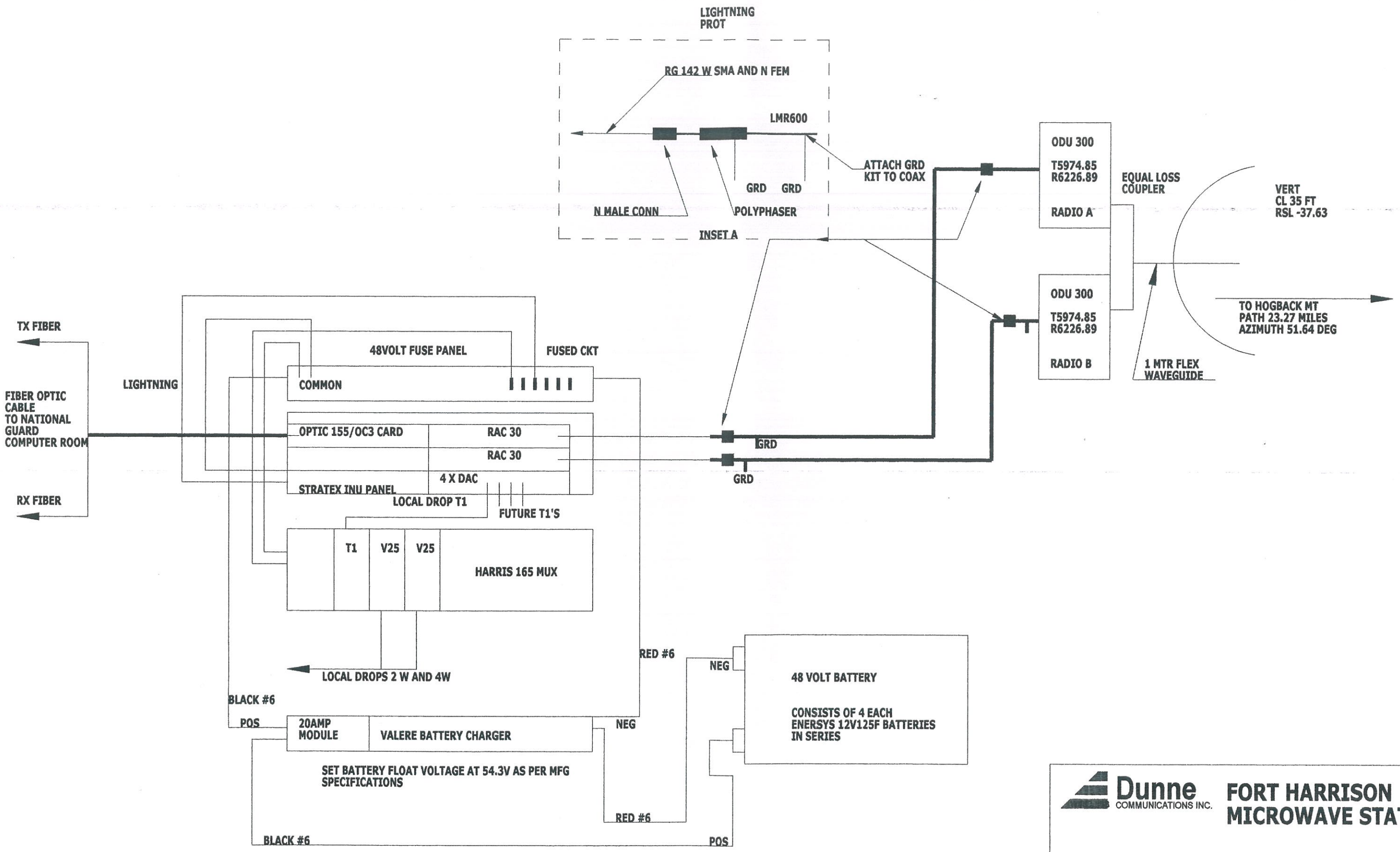

Dunne COMMUNICATIONS INC.

FORT HARRISON MICROWAVE STATION

CHECKED

SCALE	NONE	DRAWN	PDUNNE	PROJECT	MHP	DATE	5-11-06

NUMBER 2033B

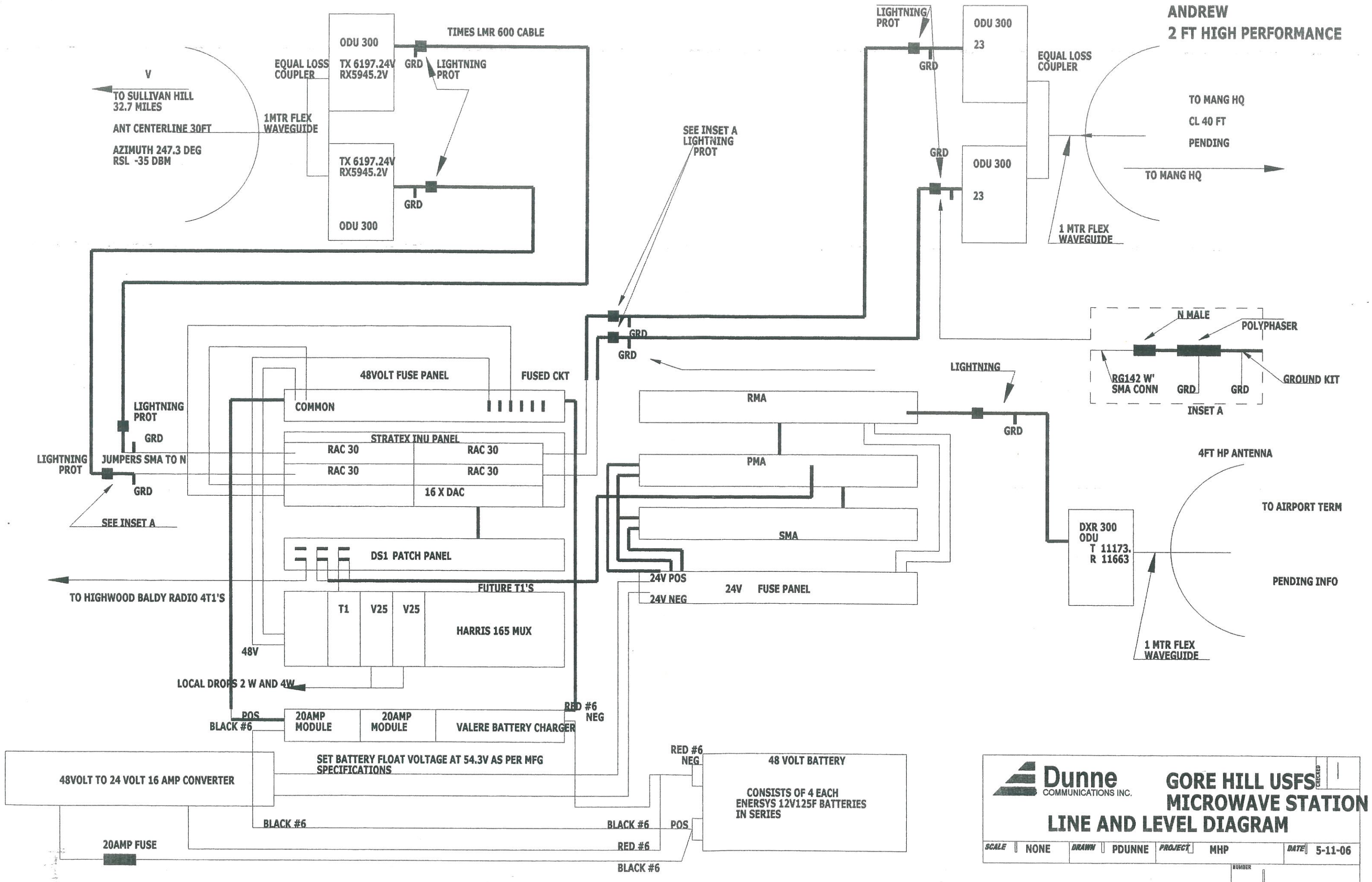
ANDREW
2 FT HIGH PERFORMANCE
V
TO SULLIVAN HILL
32.7 MILES
ANT CENTERLINE 30FT
AZIMUTH 247.3 DEG
RSL -35 DBM
EQUAL LOSS COUPLER
1MTR FLEX WAVEGUIDE
ODU 300
TX 6197.24V
RX5945.2V
GRD
LIGHTNING PROT
TIMES LMR 600 CABLE
ODU 300
TX 6197.24V
RX5945.2V
GRD
ODU 300
SEE INSET A
LIGHTNING PROT
LIGHTNING PROT
GRD
ODU 300
23
GRD
ODU 300
23
EQUAL LOSS COUPLER
TO MANG HQ
CL 40 FT
PENDING
TO MANG HQ
1 MTR FLEX WAVEGUIDE
N MALE
POLYPHASER
RG142 W'
SMA CONN
GRD
GRD
GROUND KIT
INSET A
GRD
GRD
LIGHTNING
GRD
RMA
PMA
SMA
24V POS
24V NEG
24V FUSE PANEL
4FT HP ANTENNA
TO AIRPORT TERM
DXR 300
ODU
T 11173.
R 11663
PENDING INFO
1 MTR FLEX WAVEGUIDE
48VOLT FUSE PANEL
FUSED CKT
COMMON
LIGHTNING PROT
GRD
LIGHTNING PROT
JUMPERS SMA TO N
GRD
SEE INSET A
STRATEX INU PANEL
RAC 30
RAC 30
RAC 30
RAC 30
16 X DAC
DS1 PATCH PANEL
TO HIGHWOOD BALDY RADIO 4T1'S
FUTURE T1'S
T1
V25
V25
HARRIS 165 MUX
48V
LOCAL DROPS 2 W AND 4W
POS
BLACK #6
20AMP MODULE
20AMP MODULE
VALERE BATTERY CHARGER
RED #6
NEG
SET BATTERY FLOAT VOLTAGE AT 54.3V AS PER MFG SPECIFICATIONS
48VOLT TO 24 VOLT 16 AMP CONVERTER
RED #6
NEG
48 VOLT BATTERY
CONSISTS OF 4 EACH ENERSYS 12V125F BATTERIES IN SERIES
BLACK #6
BLACK #6
POS
RED #6
BLACK #6
20AMP FUSE
Dunne
COMMUNICATIONS INC.
GORE HILL USFS
MICROWAVE STATION
LINE AND LEVEL DIAGRAM
CHECKED
SCALE
NONE
DRAWN
PDUNNE
PROJECT
MHP
DATE
5-11-06
NUMBER

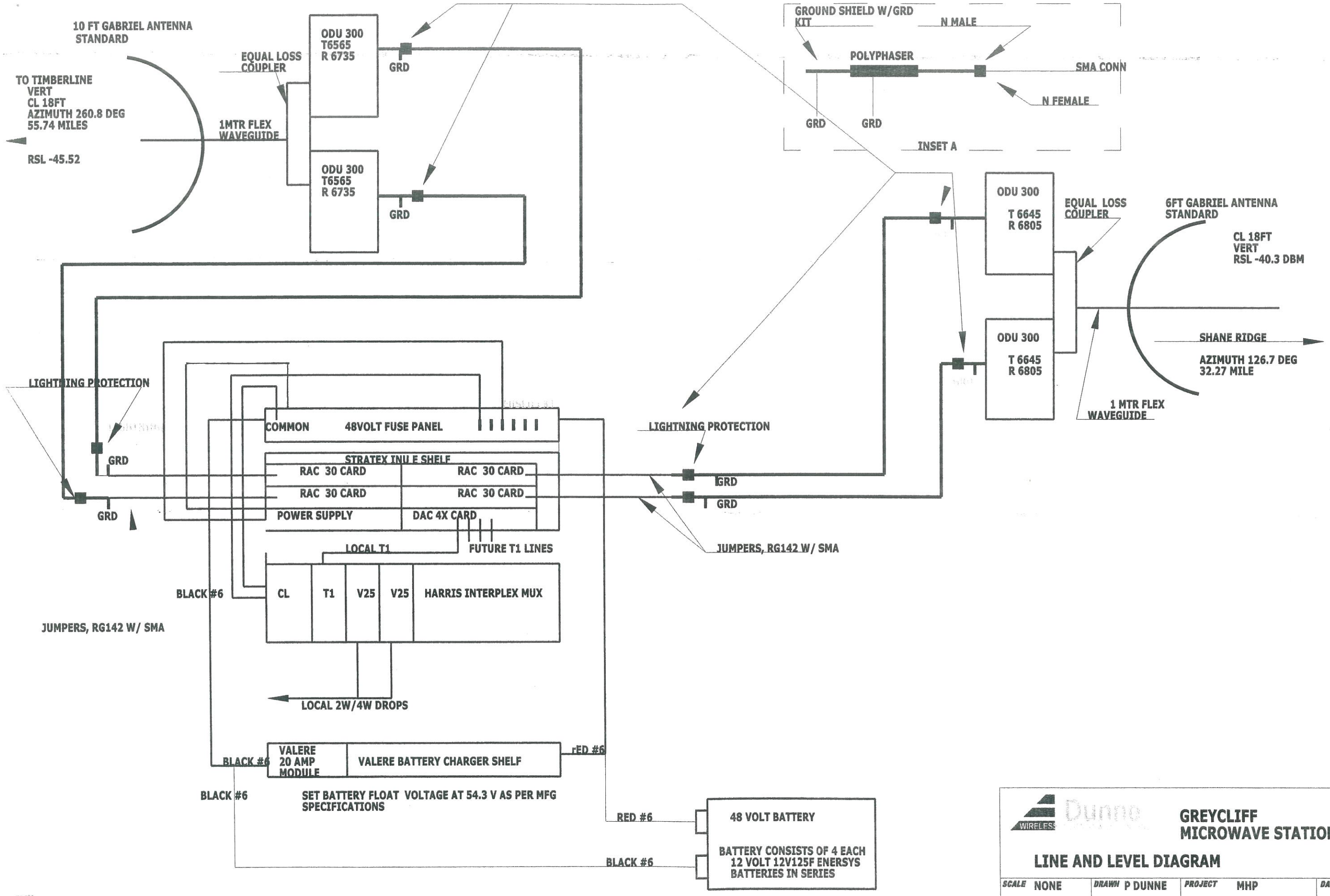

Dunne WIRELESS

GREYCLIFF MICROWAVE STATION

LINE AND LEVEL DIAGRAM

CHECKED B

SCALE	DRAWN	PROJECT	DATE
NONE	P DUNNE	MHP	5-11-06

NUMBER

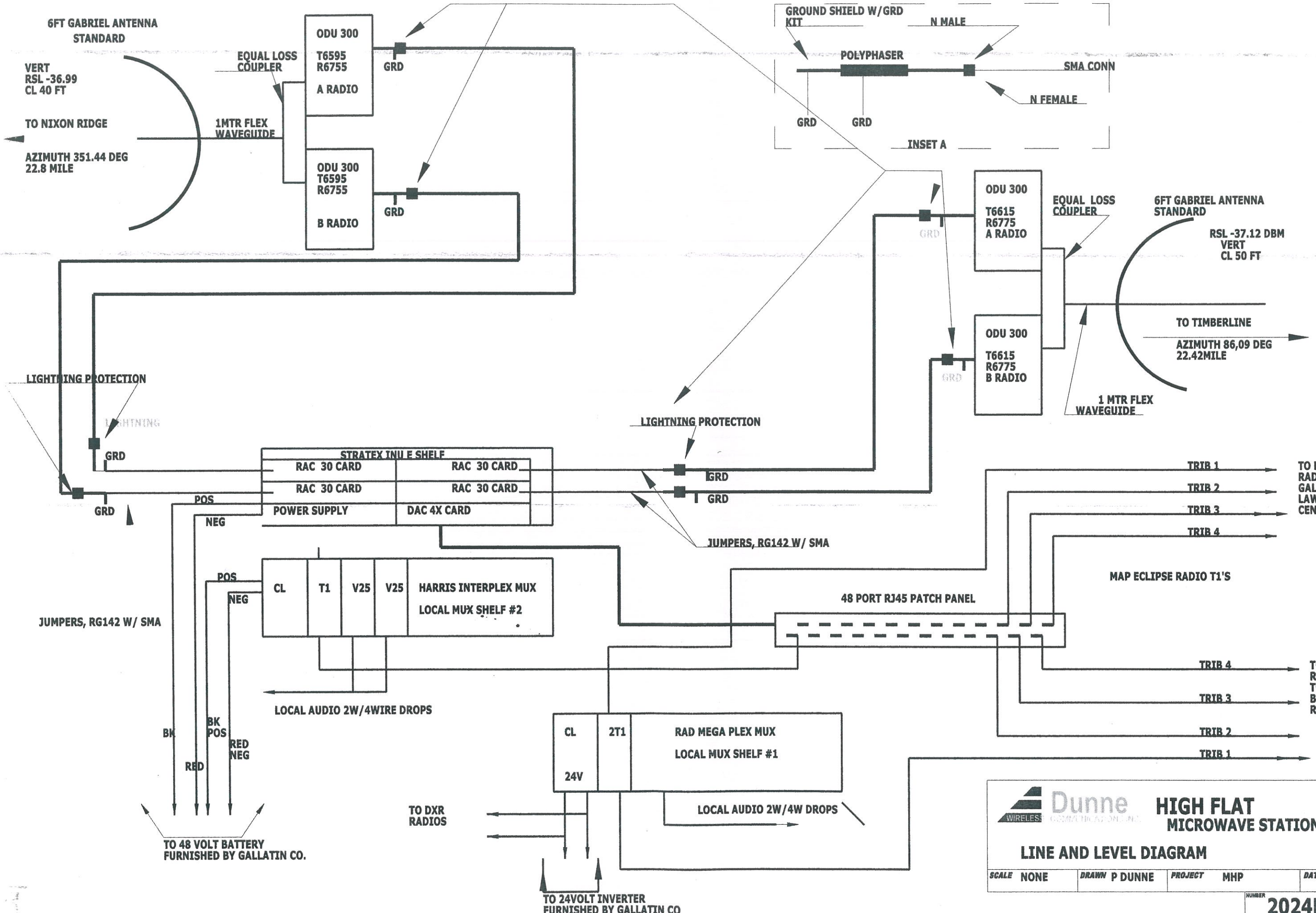
6FT GABRIEL ANTENNA
STANDARD
VERT
RSL -36.99
CL 40 FT
TO NIXON RIDGE
AZIMUTH 351.44 DEG
22.8 MILE
EQUAL LOSS
COUPLER
1MTR FLEX
WAVEGUIDE
ODU 300
T6595
R6755
A RADIO
ODU 300
T6595
R6755
B RADIO
GRD
GROUND SHIELD W/GRD
KIT
N MALE
POLYPHASER
SMA CONN
N FEMALE
INSET A
ODU 300
T6615
R6775
A RADIO
ODU 300
T6615
R6775
B RADIO
EQUAL LOSS
COUPLER
6FT GABRIEL ANTENNA
STANDARD
RSL -37.12 DBM
VERT
CL 50 FT
TO TIMBERLINE
AZIMUTH 86,09 DEG
22.42MILE
1 MTR FLEX
WAVEGUIDE
LIGHTNING PROTECTION
LIGHTNING
LIGHTNING PROTECTION
STRATEX INU E SHELF
RAC 30 CARD
RAC 30 CARD
RAC 30 CARD
RAC 30 CARD
POWER SUPPLY
DAC 4X CARD
POS
NEG
JUMPERS, RG142 W/ SMA
JUMPERS, RG142 W/ SMA
CL
T1
V25
V25
HARRIS INTERPLEX MUX
LOCAL MUX SHELF #2
LOCAL AUDIO 2W/4WIRE DROPS
48 PORT RJ45 PATCH PANEL
TRIB 1
TRIB 2
TRIB 3
TRIB 4
TO DXR
RADIO TO
GALLATIN
LAW
CENTER
MAP ECLIPSE RADIO T1'S
TRIB 4
TRIB 3
TRIB 2
TRIB 1
TO DXR
RADIO
TO
BRIDGER
RIDGE
BK
RED
BK
POS
RED
NEG
TO 48 VOLT BATTERY
FURNISHED BY GALLATIN CO.
CL
2T1
24V
RAD MEGA PLEX MUX
LOCAL MUX SHELF #1
LOCAL AUDIO 2W/4W DROPS
TO DXR
RADIOS
TO 24VOLT INVERTER
FURNISHED BY GALLATIN CO
Dunne
WIRELESS
HIGH FLAT
MICROWAVE STATION
LINE AND LEVEL DIAGRAM
B
SCALE NONE
DRAWN P DUNNE
PROJECT MHP
DATE 5-11-06
NUMBER
2024B

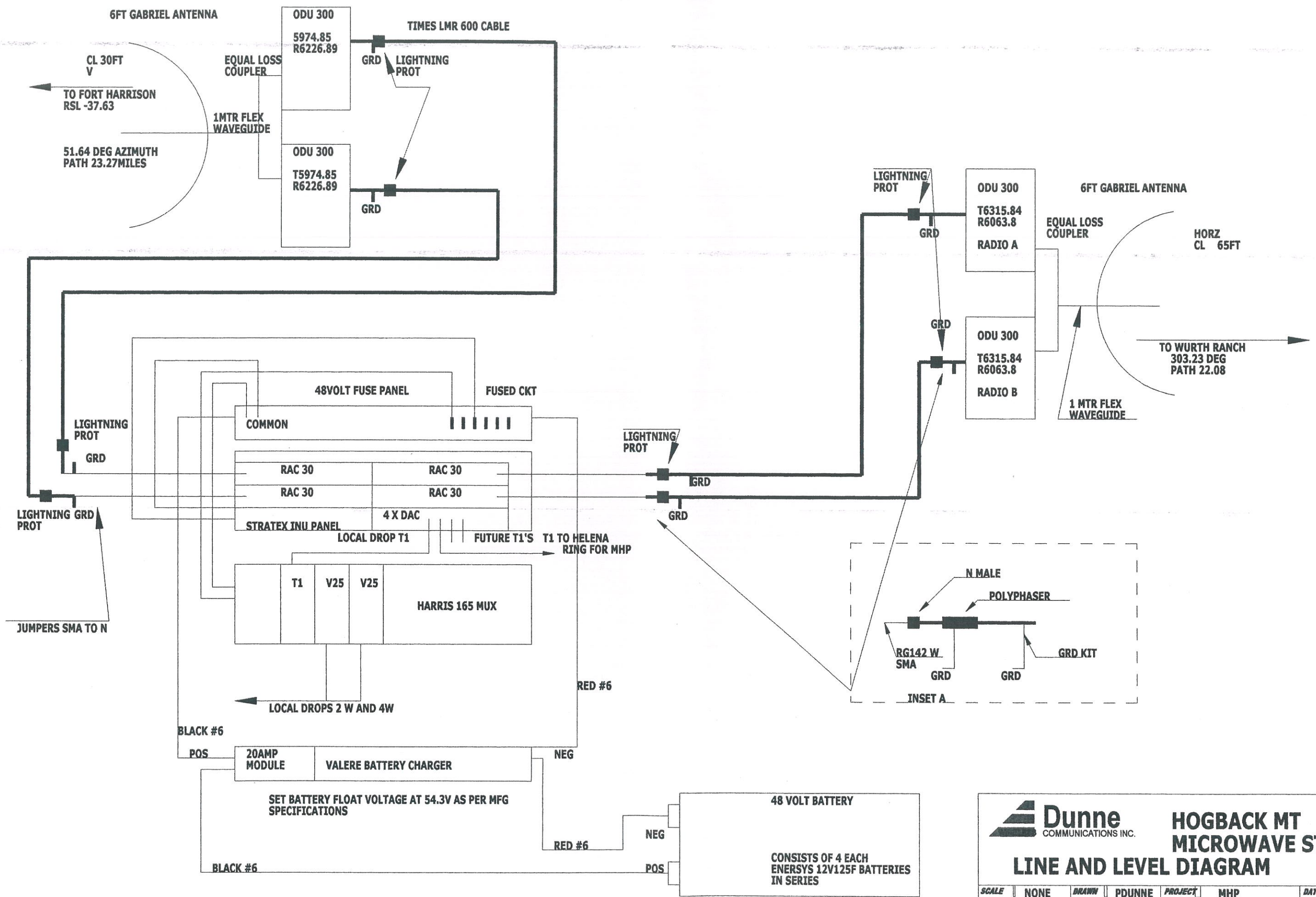

Dunne COMMUNICATIONS INC.

HOGBACK MT MICROWAVE STATION

LINE AND LEVEL DIAGRAM

CHECKED

SCALE	DRAWN	PROJECT	DATE
NONE	PDUNNE	MHP	5-11-06

NUMBER 2034B

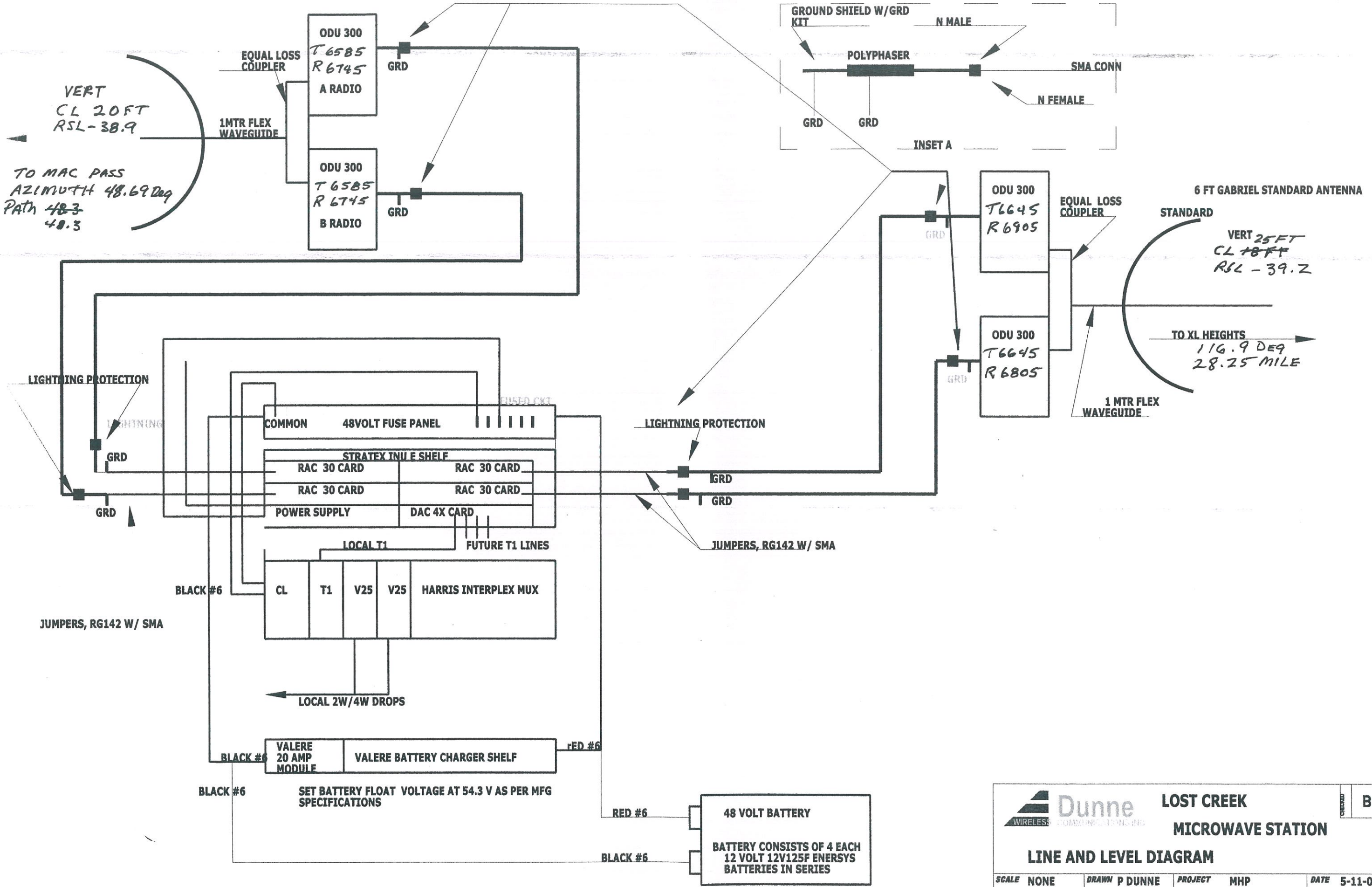

Dunne WIRELESS COMMUNICATIONS INC

LOST CREEK

MICROWAVE STATION

LINE AND LEVEL DIAGRAM

SCALE	DRAWN	PROJECT	DATE	CHECKED
NONE	P DUNNE	MHP	5-11-06	B

NUMBER **2031B**

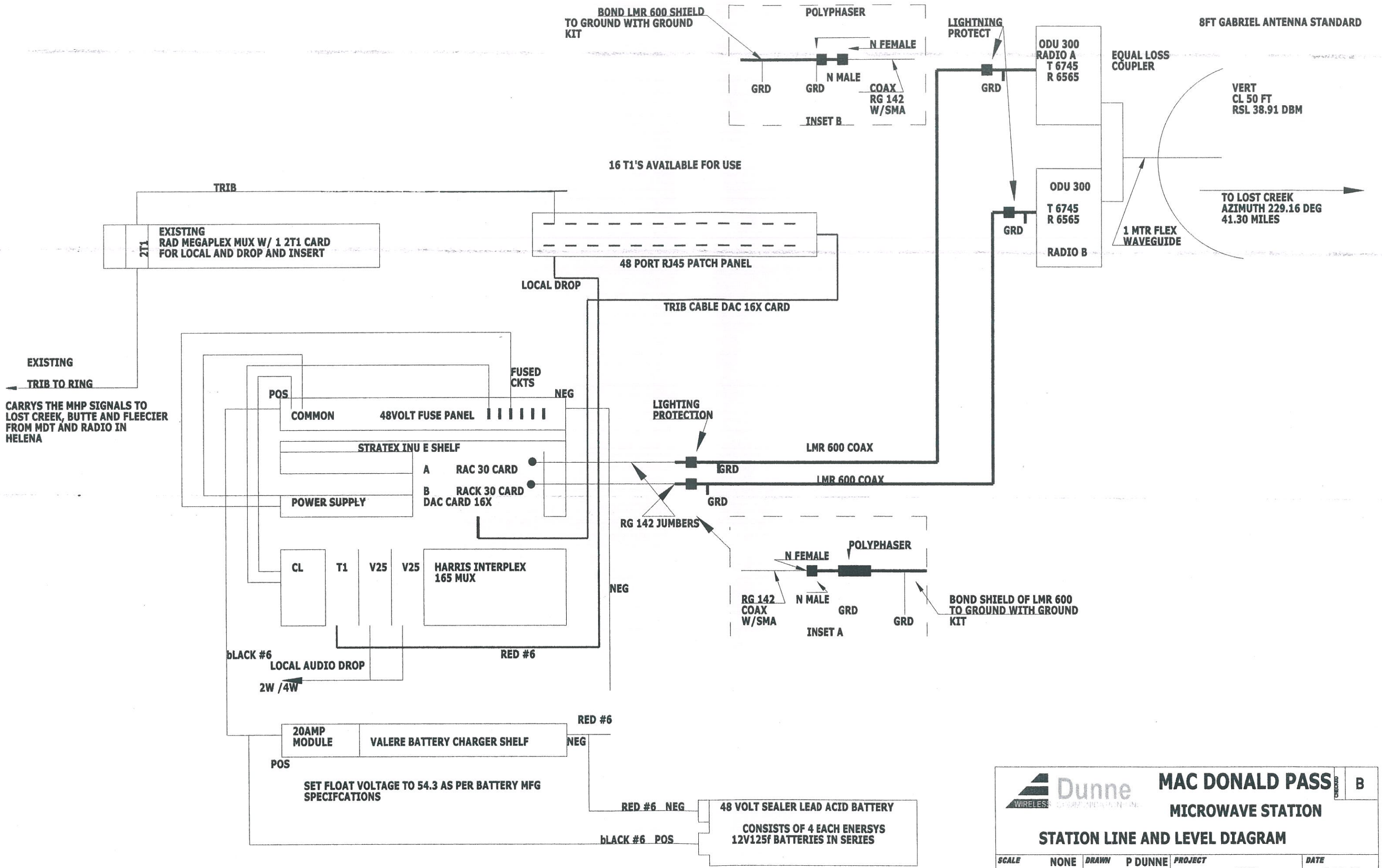

Dunne WIRELESS COMMUNICATIONS INC

MAC DONALD PASS

REVISED B

MICROWAVE STATION

STATION LINE AND LEVEL DIAGRAM

SCALE	DRAWN	PROJECT	DATE
NONE	P DUNNE	MHP	5-11-06

NUMBER 2032B

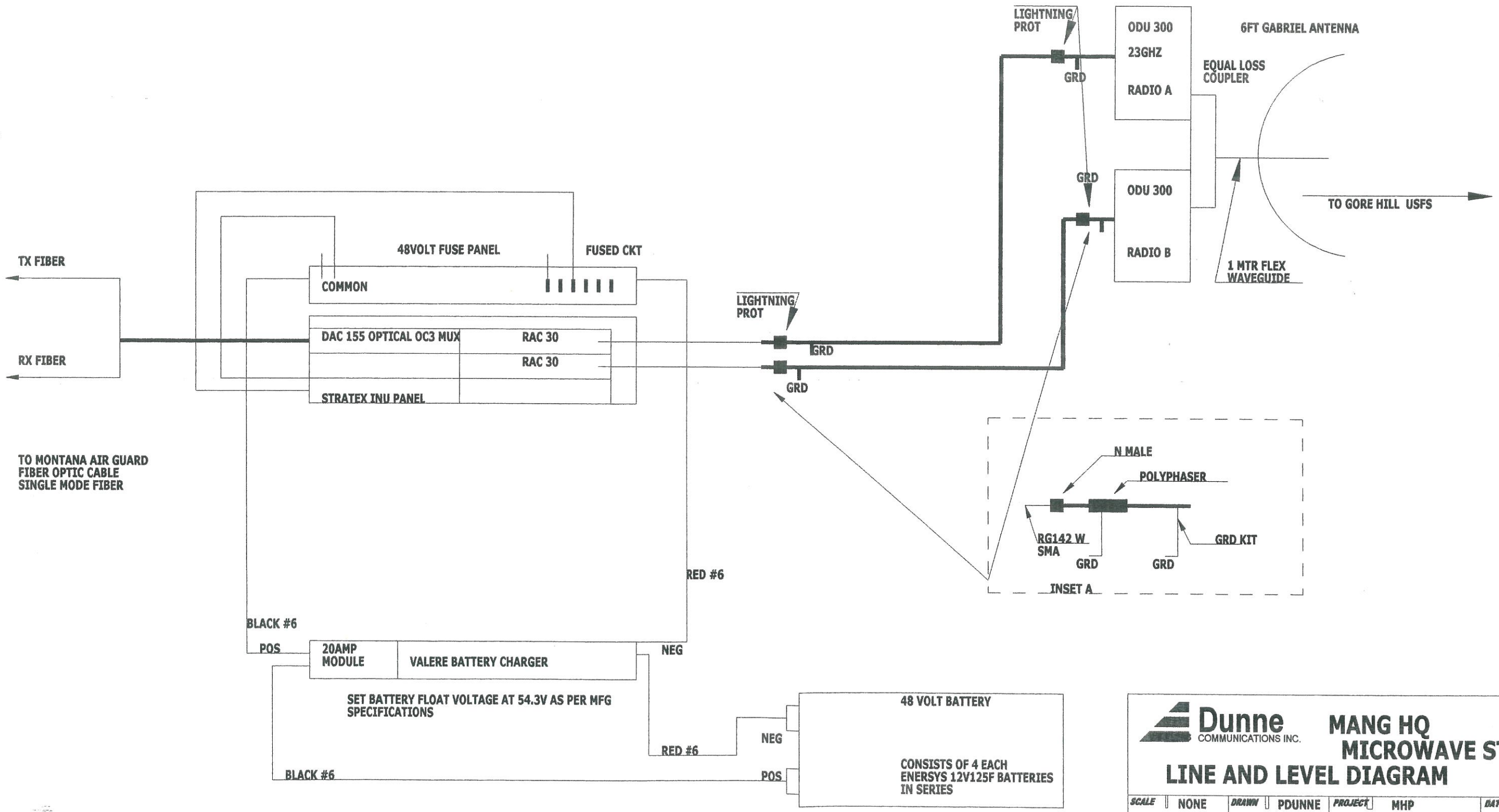

Dunne COMMUNICATIONS INC.

MANG HQ MICROWAVE STATION

LINE AND LEVEL DIAGRAM

CHECKED

SCALE	DRAWN	PROJECT	DATE
NONE	PDUNNE	MHP	5-11-06

NUMBER 2035B

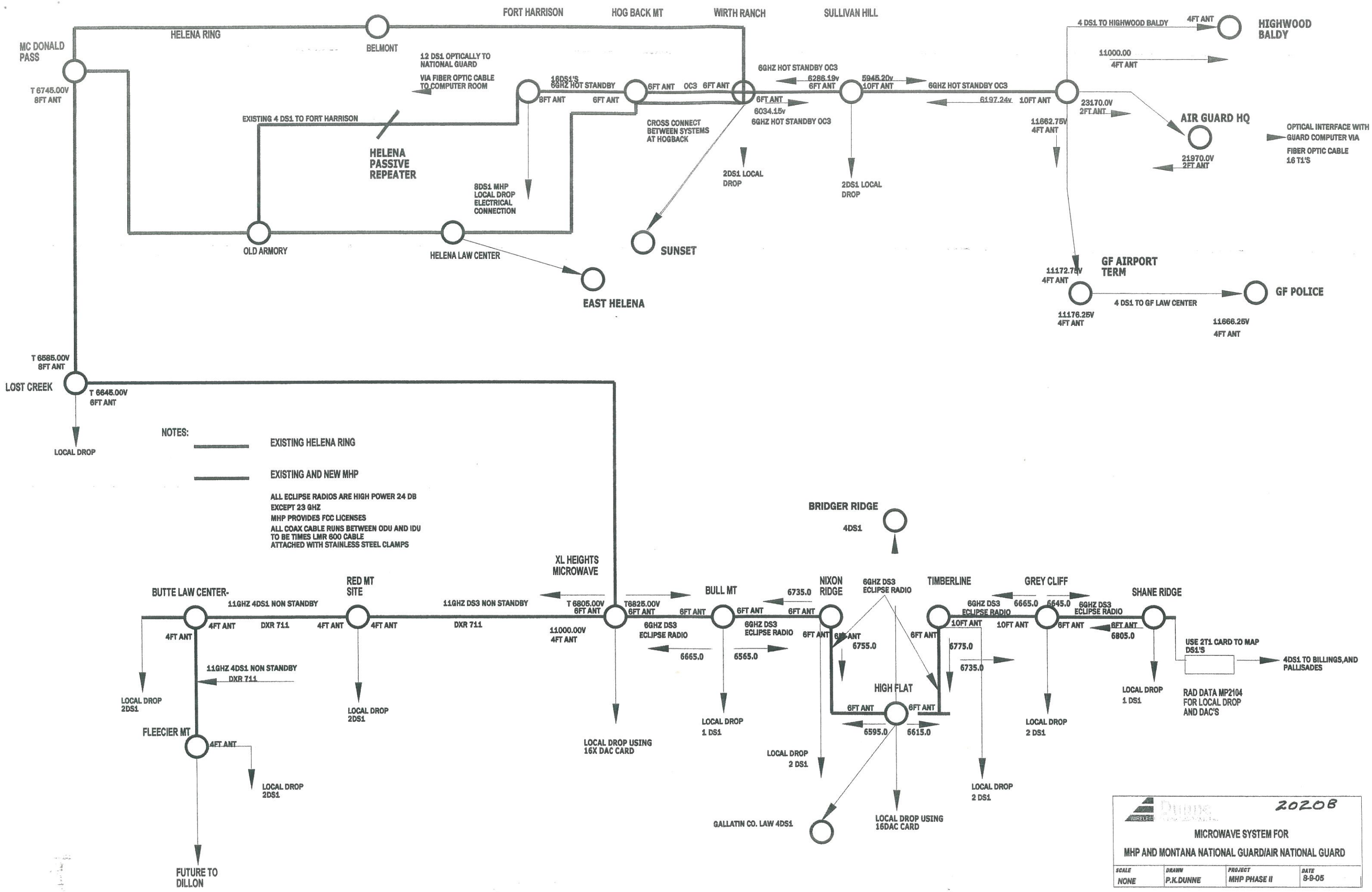
MC DONALD PASS
T 6745.00V
8FT ANT
HELENA RING
BELMONT
FORT HARRISON
HOG BACK MT
WIRTH RANCH
SULLIVAN HILL
12 DS1 OPTICALLY TO NATIONAL GUARD
VIA FIBER OPTIC CABLE TO COMPUTER ROOM
16DS1'S
6GHZ HOT STANDBY
8FT ANT
6FT ANT
6FT ANT
OC3
6FT ANT
6GHZ HOT STANDBY OC3
6286.19v
6FT ANT
5945.20v
10FT ANT
6GHZ HOT STANDBY OC3
6197.24v
10FT ANT
6FT ANT
6034.15v
6GHZ HOT STANDBY OC3
EXISTING 4 DS1 TO FORT HARRISON
HELENA PASSIVE REPEATER
CROSS CONNECT BETWEEN SYSTEMS AT HOGBACK
8DS1 MHP LOCAL DROP ELECTRICAL CONNECTION
2DS1 LOCAL DROP
2DS1 LOCAL DROP
OLD ARMORY
HELENA LAW CENTER
SUNSET
EAST HELENA
4 DS1 TO HIGHWOOD BALDY
4FT ANT
HIGHWOOD BALDY
11000.00
4FT ANT
23170.0V
2FT ANT
AIR GUARD HQ
21970.0V
2FT ANT
OPTICAL INTERFACE WITH GUARD COMPUTER VIA FIBER OPTIC CABLE 16 T1'S
11662.75V
4FT ANT
GF AIRPORT TERM
11172.75V
4FT ANT
11176.25V
4FT ANT
4 DS1 TO GF LAW CENTER
GF POLICE
11666.25V
4FT ANT
T 6585.00V
8FT ANT
LOST CREEK
T 6645.00V
6FT ANT
LOCAL DROP
NOTES:
EXISTING HELENA RING
EXISTING AND NEW MHP
ALL ECLIPSE RADIOS ARE HIGH POWER 24 DB
EXCEPT 23 GHZ
MHP PROVIDES FCC LICENSES
ALL COAX CABLE RUNS BETWEEN ODU AND IDU
TO BE TIMES LMR 600 CABLE
ATTACHED WITH STAINLESS STEEL CLAMPS
BRIDGER RIDGE
4DS1
XL HEIGHTS MICROWAVE
BUTTE LAW CENTER-
11GHZ 4DS1 NON STANDBY
4FT ANT
DXR 711
4FT ANT
4FT ANT
RED MT SITE
11GHZ DS3 NON STANDBY
DXR 711
T 6805.00V
6FT ANT
11000.00V
4FT ANT
T6825.00V
6FT ANT
6GHZ DS3
ECLIPSE RADIO
6665.0
BULL MT
6FT ANT
6FT ANT
6GHZ DS3
ECLIPSE RADIO
6565.0
6735.0
NIXON RIDGE
6FT ANT
6FT ANT
6755.0
6GHZ DS3
ECLIPSE RADIO
TIMBERLINE
6FT ANT
6775.0
6735.0
GREY CLIFF
6665.0
6645.0
6GHZ DS3
ECLIPSE RADIO
10FT ANT
10FT ANT
6FT ANT
SHANE RIDGE
6GHZ DS3
ECLIPSE RADIO
6FT ANT
6805.0
USE 2T1 CARD TO MAP DS1'S
4DS1 TO BILLINGS,AND PALLISADES
RAD DATA MP2104 FOR LOCAL DROP AND DAC'S
HIGH FLAT
6FT ANT
6FT ANT
6595.0
6615.0
LOCAL DROP
2DS1
LOCAL DROP
2DS1
FLEECIER MT
4FT ANT
LOCAL DROP
2DS1
FUTURE TO DILLON
LOCAL DROP USING 16X DAC CARD
LOCAL DROP
1 DS1
LOCAL DROP
2 DS1
GALLATIN CO. LAW 4DS1
LOCAL DROP USING 16DAC CARD
LOCAL DROP
2 DS1
LOCAL DROP
2 DS1
LOCAL DROP
1 DS1
20208
MICROWAVE SYSTEM FOR
MHP AND MONTANA NATIONAL GUARD/AIR NATIONAL GUARD
SCALE
NONE
DRAWN
P.K.DUNNE
PROJECT
MHP PHASE II
DATE
8-9-05

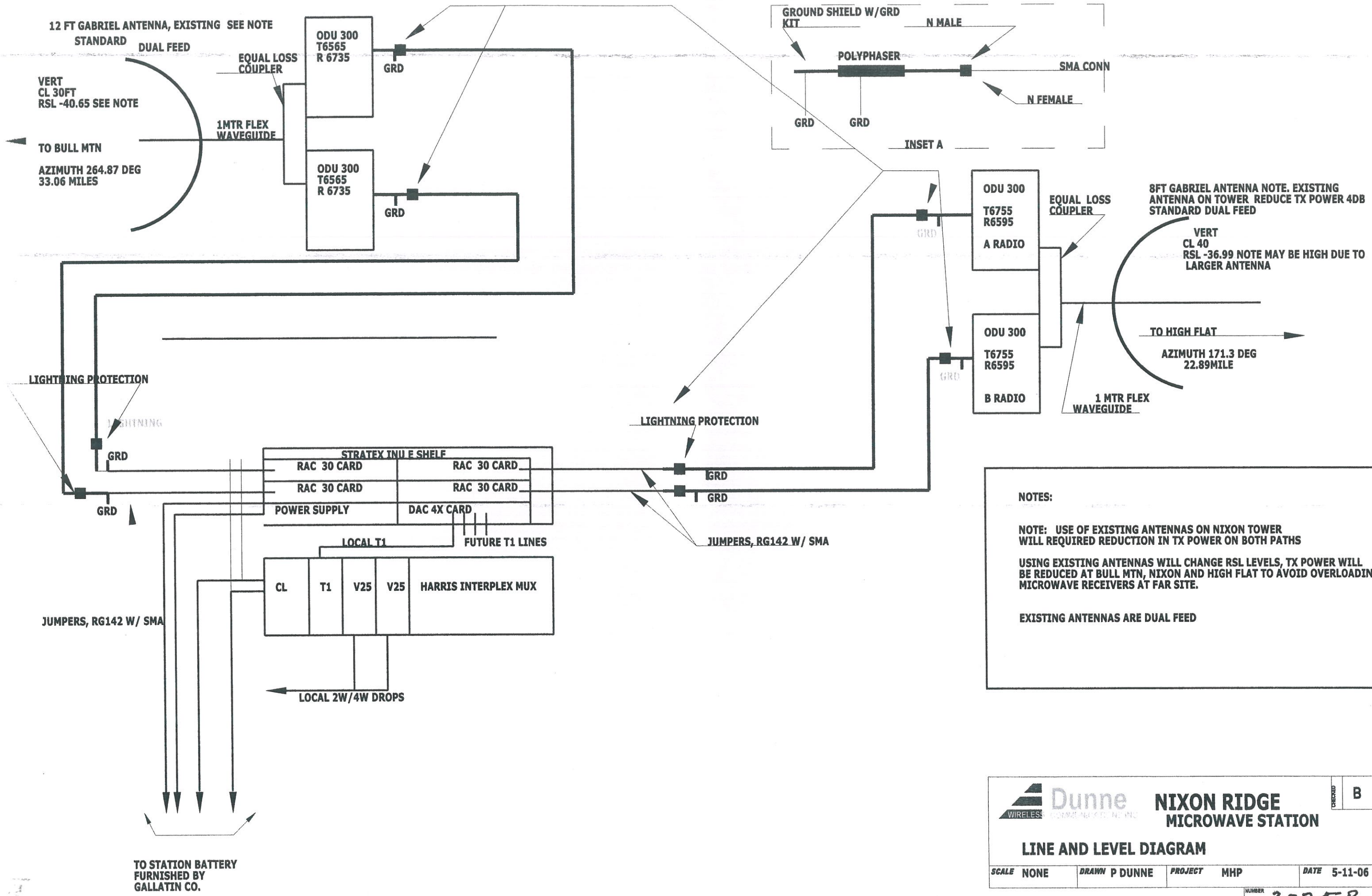

NOTES:

NOTE: USE OF EXISTING ANTENNAS ON NIXON TOWER WILL REQUIRED REDUCTION IN TX POWER ON BOTH PATHS

USING EXISTING ANTENNAS WILL CHANGE RSL LEVELS, TX POWER WILL BE REDUCED AT BULL MTN, NIXON AND HIGH FLAT TO AVOID OVERLOADING MICROWAVE RECEIVERS AT FAR SITE.

EXISTING ANTENNAS ARE DUAL FEED

Dunne WIRELESS COMMUNICATIONS, INC

NIXON RIDGE
MICROWAVE STATION

REVISED B

LINE AND LEVEL DIAGRAM

SCALE	DRAWN	PROJECT	DATE
NONE	P DUNNE	MHP	5-11-06

NUMBER 2025B

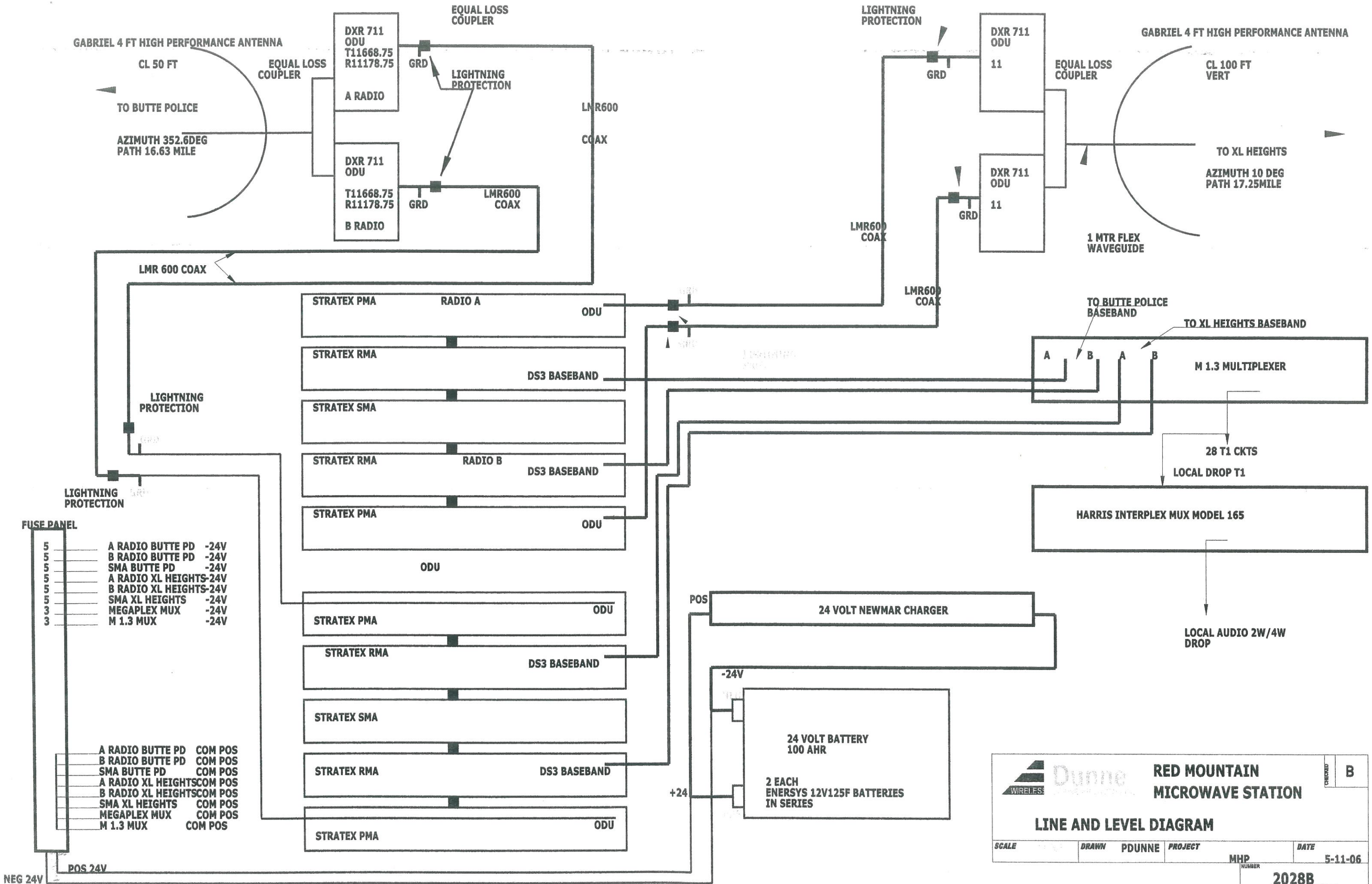
GABRIEL 4 FT HIGH PERFORMANCE ANTENNA
CL 50 FT
TO BUTTE POLICE
AZIMUTH 352.6DEG
PATH 16.63 MILE
EQUAL LOSS COUPLER
DXR 711 ODU T11668.75 R11178.75 A RADIO
EQUAL LOSS COUPLER
GRD
LIGHTNING PROTECTION
LMR600 COAX
DXR 711 ODU T11668.75 R11178.75 B RADIO
GRD
LMR600 COAX
LMR 600 COAX
LIGHTNING PROTECTION
LIGHTNING PROTECTION
GRD
DXR 711 ODU 11
EQUAL LOSS COUPLER
GABRIEL 4 FT HIGH PERFORMANCE ANTENNA
CL 100 FT VERT
TO XL HEIGHTS
AZIMUTH 10 DEG
PATH 17.25MILE
DXR 711 ODU 11
GRD
LMR600 COAX
1 MTR FLEX WAVEGUIDE
LMR600 COAX
STRATEX PMA RADIO A
ODU
STRATEX RMA
DS3 BASEBAND
STRATEX SMA
STRATEX RMA RADIO B
DS3 BASEBAND
STRATEX PMA
ODU
ODU
STRATEX PMA
ODU
STRATEX RMA
DS3 BASEBAND
STRATEX SMA
STRATEX RMA
DS3 BASEBAND
STRATEX PMA
ODU
TO BUTTE POLICE BASEBAND
TO XL HEIGHTS BASEBAND
A B A B
M 1.3 MULTIPLEXER
28 T1 CKTS
LOCAL DROP T1
HARRIS INTERPLEX MUX MODEL 165
LOCAL AUDIO 2W/4W DROP
FUSE PANEL
5 A RADIO BUTTE PD -24V
5 B RADIO BUTTE PD -24V
5 SMA BUTTE PD -24V
5 A RADIO XL HEIGHTS -24V
5 B RADIO XL HEIGHTS -24V
5 SMA XL HEIGHTS -24V
3 MEGAPLEX MUX -24V
3 M 1.3 MUX -24V
A RADIO BUTTE PD COM POS
B RADIO BUTTE PD COM POS
SMA BUTTE PD COM POS
A RADIO XL HEIGHTS COM POS
B RADIO XL HEIGHTS COM POS
SMA XL HEIGHTS COM POS
MEGAPLEX MUX COM POS
M 1.3 MUX COM POS
POS 24V
NEG 24V
POS
24 VOLT NEWMAR CHARGER
-24V
24 VOLT BATTERY 100 AHR
+24
2 EACH ENERSYS 12V125F BATTERIES IN SERIES
Dunne WIRELESS
RED MOUNTAIN MICROWAVE STATION
CHECKED
B
LINE AND LEVEL DIAGRAM
SCALE
DRAWN PDUNNE
PROJECT MHP
DATE 5-11-06
NUMBER 2028B

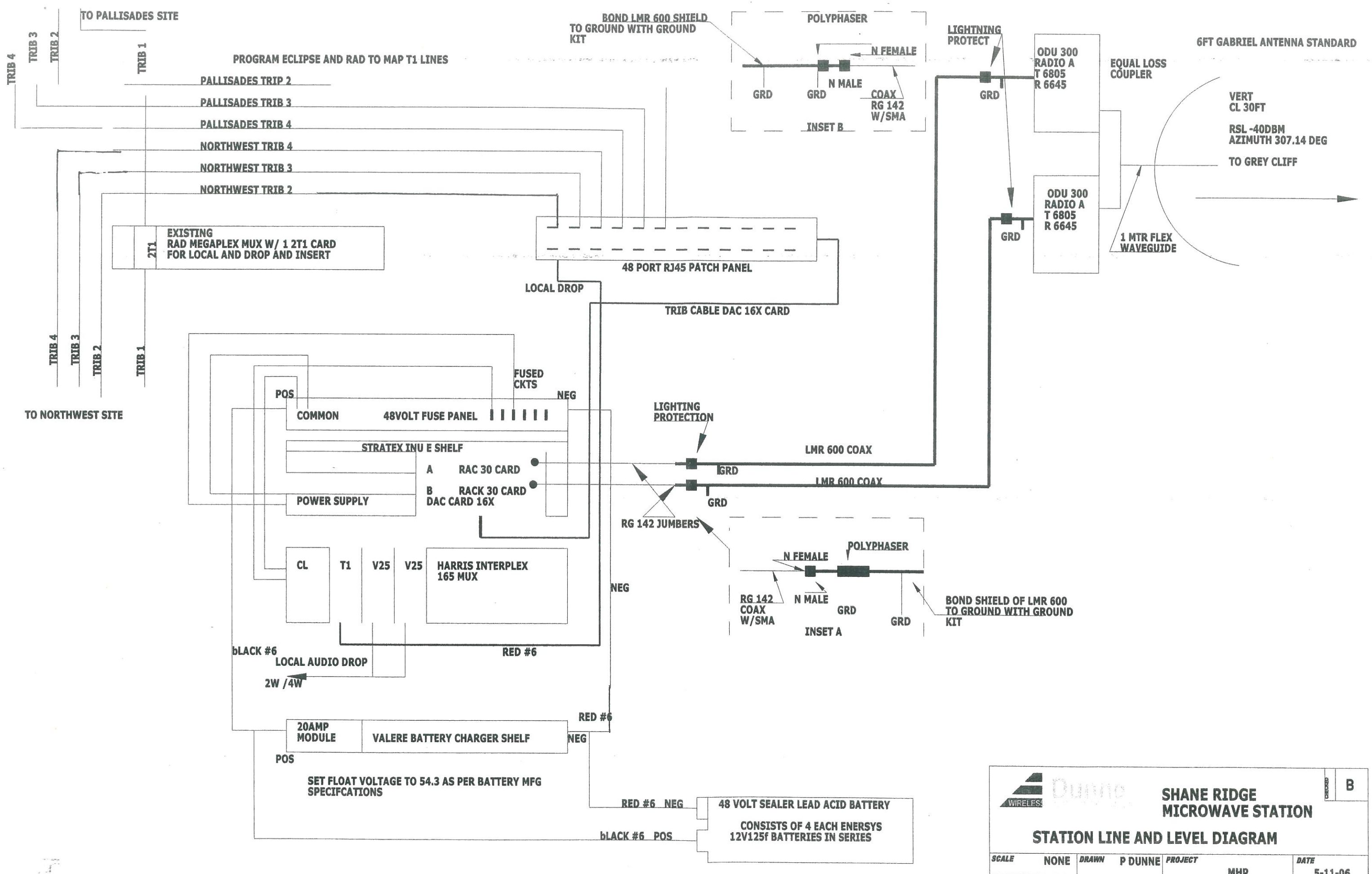
TO PALLISADES SITE
TRIB 4
TRIB 3
TRIB 2
TRIB 1
PROGRAM ECLIPSE AND RAD TO MAP T1 LINES
PALLISADES TRIP 2
PALLISADES TRIB 3
PALLISADES TRIB 4
NORTHWEST TRIB 4
NORTHWEST TRIB 3
NORTHWEST TRIB 2
BOND LMR 600 SHIELD TO GROUND WITH GROUND KIT
POLYPHASER
N FEMALE
N MALE
GRD
GRD
COAX RG 142 W/SMA
INSET B
LIGHTNING PROTECT
GRD
ODU 300 RADIO A T 6805 R 6645
EQUAL LOSS COUPLER
6FT GABRIEL ANTENNA STANDARD
VERT CL 30FT
RSL -40DBM AZIMUTH 307.14 DEG
TO GREY CLIFF
GRD
ODU 300 RADIO A T 6805 R 6645
1 MTR FLEX WAVEGUIDE
EXISTING RAD MEGAPLEX MUX W/ 1 2T1 CARD FOR LOCAL AND DROP AND INSERT
2T1
48 PORT RJ45 PATCH PANEL
LOCAL DROP
TRIB CABLE DAC 16X CARD
TRIB 4
TRIB 3
TRIB 2
TRIB 1
TO NORTHWEST SITE
FUSED CKTS
POS
NEG
COMMON
48VOLT FUSE PANEL
LIGHTING PROTECTION
STRATEX INU E SHELF
A RAC 30 CARD
B RACK 30 CARD
DAC CARD 16X
POWER SUPPLY
LMR 600 COAX
GRD
LMR 600 COAX
GRD
RG 142 JUMBERS
POLYPHASER
N FEMALE
N MALE
RG 142 COAX W/SMA
GRD
GRD
INSET A
BOND SHIELD OF LMR 600 TO GROUND WITH GROUND KIT
CL
T1
V25
V25
HARRIS INTERPLEX 165 MUX
NEG
bLACK #6
LOCAL AUDIO DROP
RED #6
2W /4W
RED #6
20AMP MODULE
VALERE BATTERY CHARGER SHELF
NEG
POS
SET FLOAT VOLTAGE TO 54.3 AS PER BATTERY MFG SPECIFCATIONS
RED #6 NEG
48 VOLT SEALER LEAD ACID BATTERY
CONSISTS OF 4 EACH ENERSYS 12V125f BATTERIES IN SERIES
bLACK #6 POS
Dunne WIRELESS
SHANE RIDGE MICROWAVE STATION
B
STATION LINE AND LEVEL DIAGRAM
SCALE NONE
DRAWN P DUNNE
PROJECT MHP
DATE 5-11-06
NUMBER

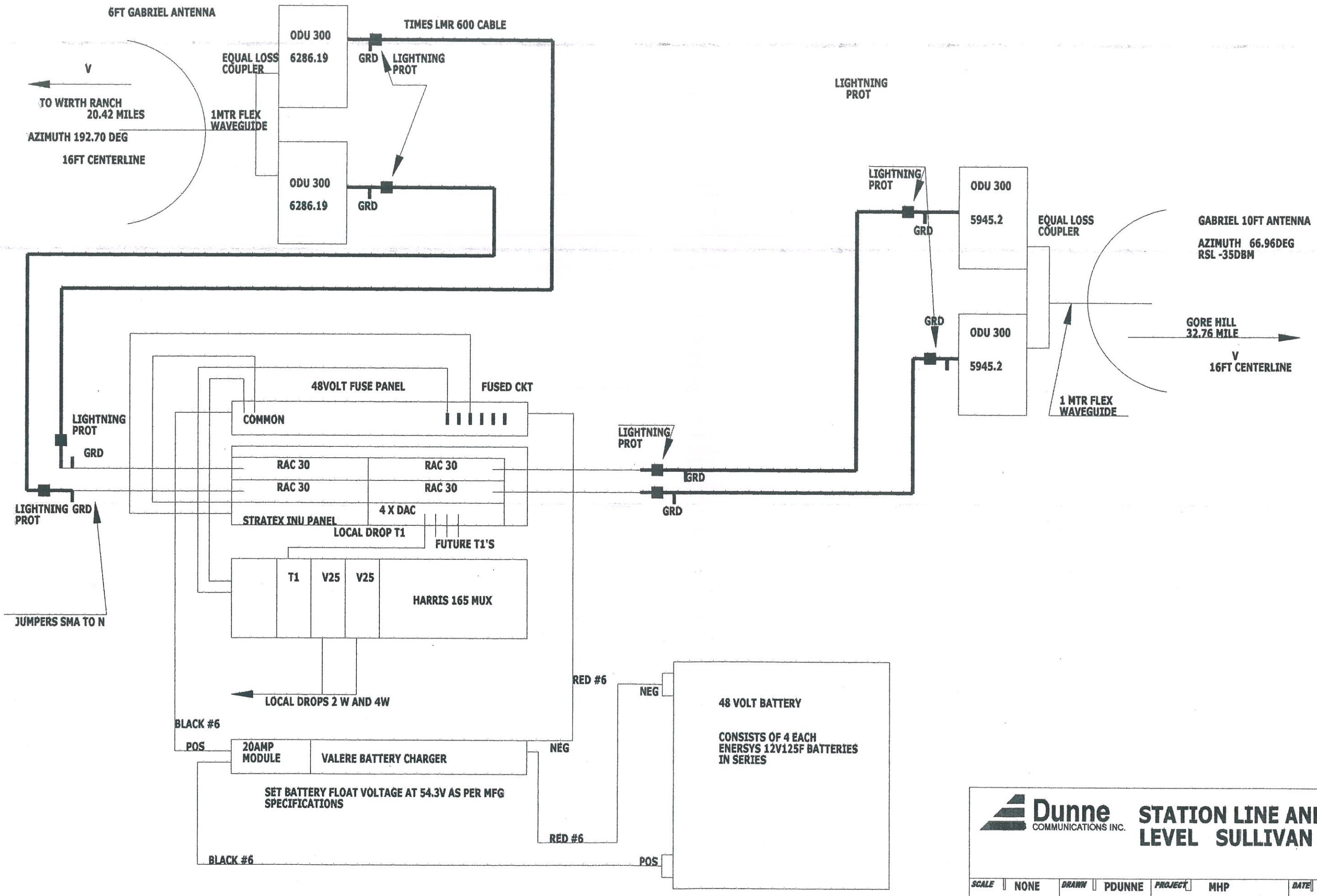

Dunne COMMUNICATIONS INC.

STATION LINE AND LEVEL SULLIVAN HILL

SCALE	NONE	DRAWN	PDUNNE	PROJECT	MHP	DATE	5-11-06

NUMBER 2036B.

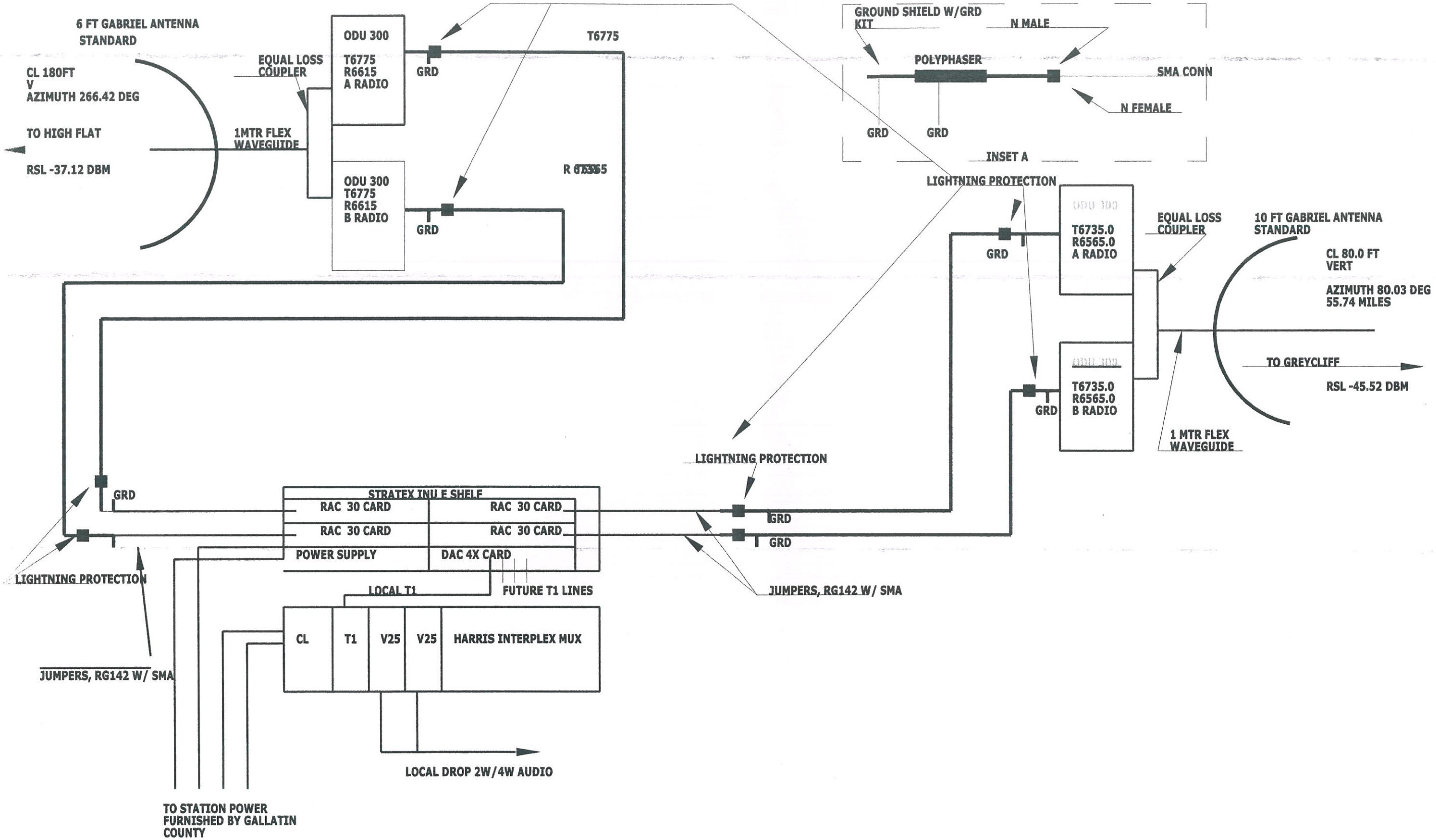

Dunne WIRELESS

TIMBERLINE

MICROWAVE STATION

CHECKED B

LINE AND LEVEL DIAGRAM

SCALE	DRAWN	PROJECT	DATE
NONE	P DUNNE	MHP	5-11-06

NUMBER **2023B**

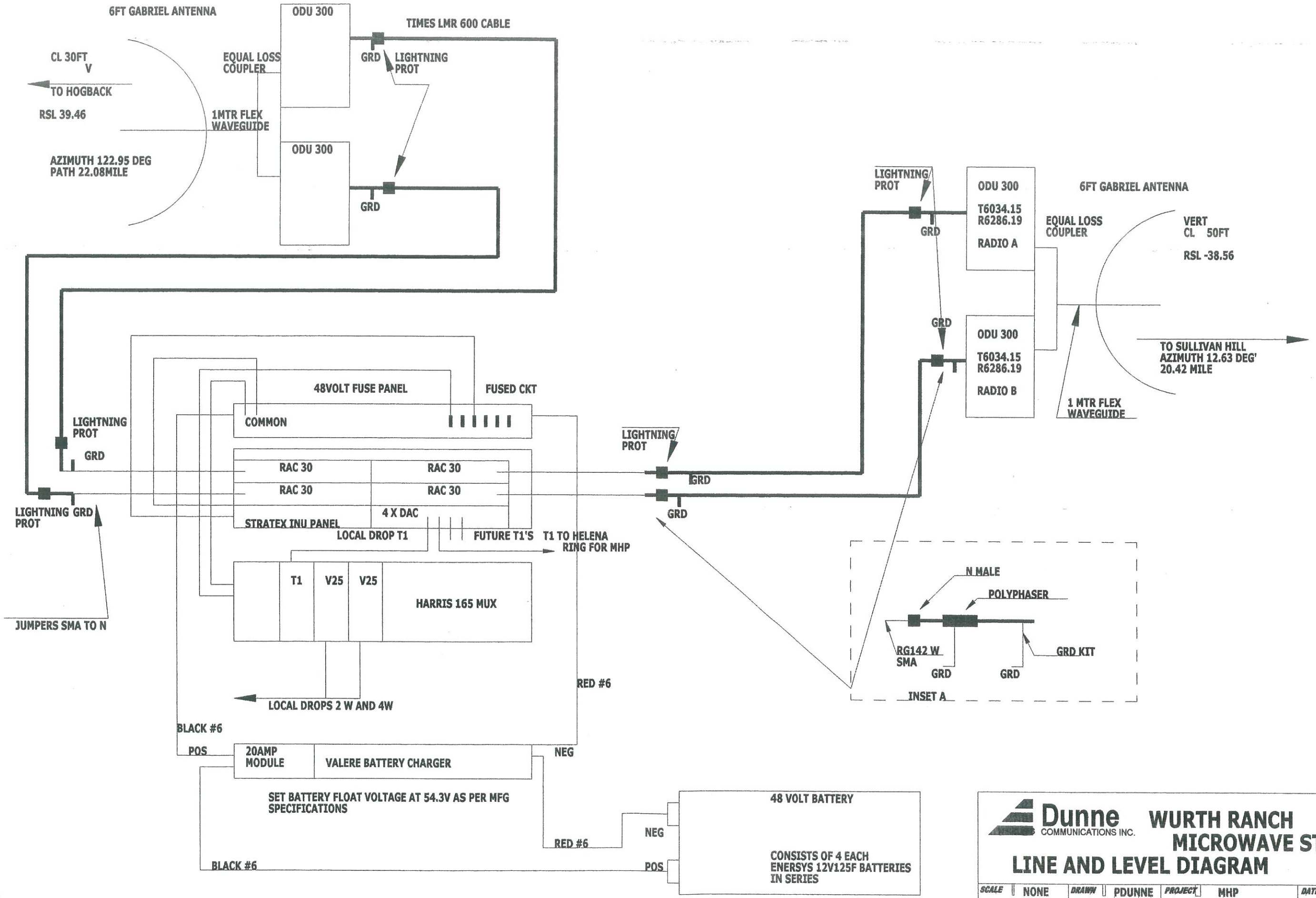

Dunne COMMUNICATIONS INC.

WURTH RANCH MICROWAVE STATION

LINE AND LEVEL DIAGRAM

SCALE	DRAWN	PROJECT	DATE	CHECKED
NONE	PDUNNE	MHP	5-11-06	

NUMBER 2035B

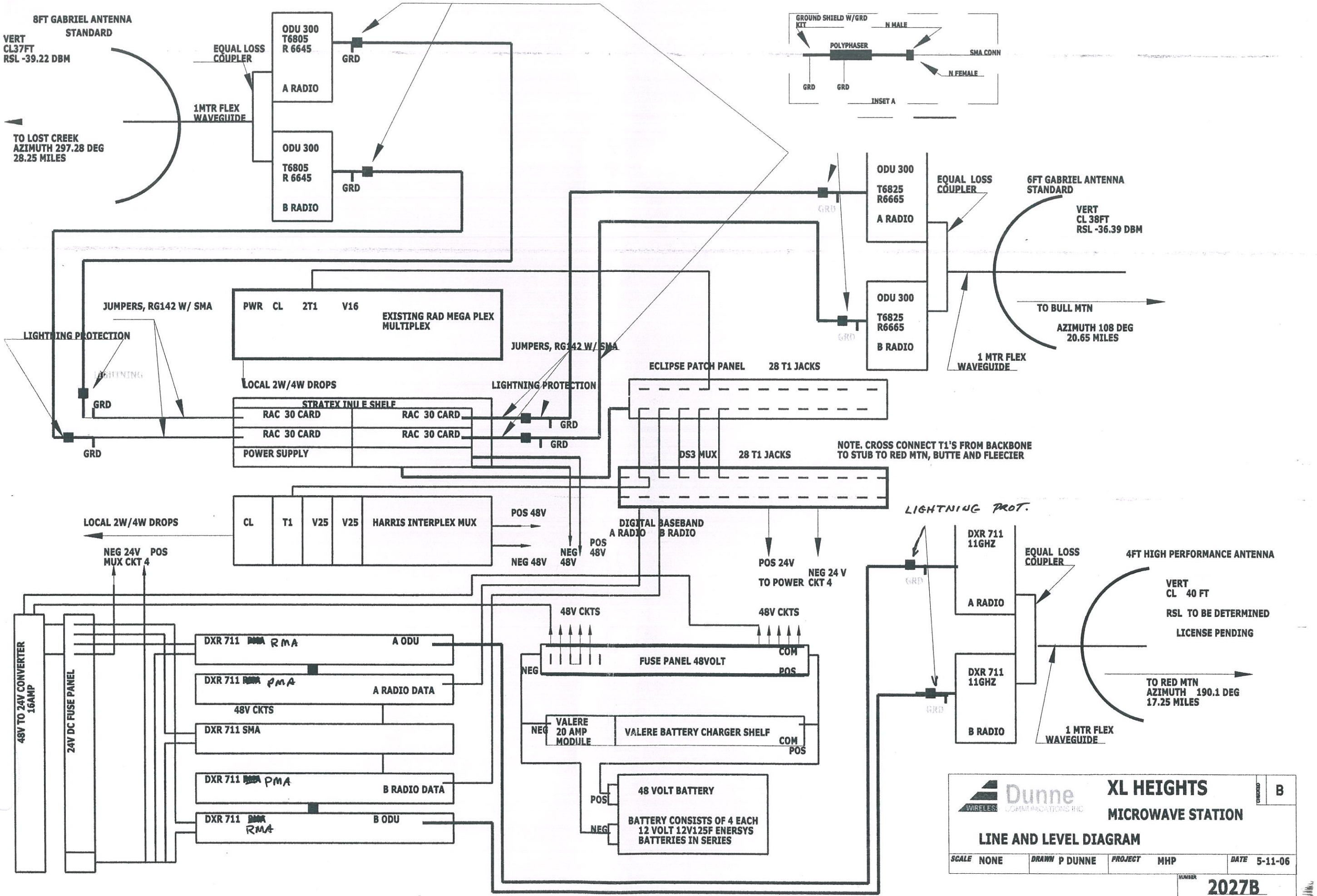
8FT GABRIEL ANTENNA
STANDARD
VERT
CL37FT
RSL -39.22 DBM
TO LOST CREEK
AZIMUTH 297.28 DEG
28.25 MILES
EQUAL LOSS COUPLER
1MTR FLEX WAVEGUIDE
ODU 300
T6805
R 6645
A RADIO
ODU 300
T6805
R 6645
B RADIO
GRD
GROUND SHIELD W/GRD KIT
N MALE
POLYPHASER
SMA CONN
N FEMALE
INSET A
ODU 300
T6825
R6665
A RADIO
ODU 300
T6825
R6665
B RADIO
EQUAL LOSS COUPLER
6FT GABRIEL ANTENNA
STANDARD
VERT
CL 38FT
RSL -36.39 DBM
TO BULL MTN
AZIMUTH 108 DEG
20.65 MILES
1 MTR FLEX WAVEGUIDE
JUMPERS, RG142 W/ SMA
PWR CL 2T1 V16
EXISTING RAD MEGA PLEX MULTIPLEX
LIGHTNING PROTECTION
LIGHTNING
JUMPERS, RG142 W/ SMA
ECLIPSE PATCH PANEL 28 T1 JACKS
LOCAL 2W/4W DROPS
LIGHTNING PROTECTION
STRATEX INU E SHELF
RAC 30 CARD
RAC 30 CARD
RAC 30 CARD
RAC 30 CARD
POWER SUPPLY
DS3 MUX 28 T1 JACKS
NOTE. CROSS CONNECT T1'S FROM BACKBONE TO STUB TO RED MTN, BUTTE AND FLEECIER
LOCAL 2W/4W DROPS
CL
T1
V25
V25
HARRIS INTERPLEX MUX
POS 48V
NEG 48V
NEG 24V POS
MUX CKT 4
DIGITAL BASEBAND
A RADIO B RADIO
POS 48V
NEG 48V
POS 24V
TO POWER CKT 4
NEG 24 V
CKT 4
LIGHTNING PROT.
DXR 711 11GHZ
A RADIO
DXR 711 11GHZ
B RADIO
EQUAL LOSS COUPLER
4FT HIGH PERFORMANCE ANTENNA
VERT
CL 40 FT
RSL TO BE DETERMINED
LICENSE PENDING
TO RED MTN
AZIMUTH 190.1 DEG
17.25 MILES
1 MTR FLEX WAVEGUIDE
48V CKTS
48V CKTS
48V TO 24V CONVERTER 16AMP
24V DC FUSE PANEL
DXR 711 RMA
A ODU
DXR 711 PMA
A RADIO DATA
48V CKTS
DXR 711 SMA
DXR 711 PMA
B RADIO DATA
DXR 711 RMA
B ODU
FUSE PANEL 48VOLT
NEG
COM
POS
VALERE 20 AMP MODULE
VALERE BATTERY CHARGER SHELF
NEG
COM
POS
48 VOLT BATTERY
POS
NEG
BATTERY CONSISTS OF 4 EACH 12 VOLT 12V125F ENERSYS BATTERIES IN SERIES
Dunne WIRELESS COMMUNICATIONS INC
XL HEIGHTS
MICROWAVE STATION
LINE AND LEVEL DIAGRAM
B
SCALE NONE
DRAWN P DUNNE
PROJECT MHP
DATE 5-11-06
NUMBER 2027B